OPERATING AND PARTS MANUAL

D SERIES TOOLBAR

2023

DaltonAg.com 602 E. Van Buren Lenox, Iowa 50851 **800.342.7498**

TABLE OF CONTENTS

TO YOU THE OWNER..... 1
LIMITED WARRANTY STATEMENT..... 2
NEW MACHINE CHECKOUT..... 3
IMPLEMENT SAFETY..... 4
PRE-SEASON CHECK..... 5
BOLT TORQUE CHART..... 6
ANHYDROUS AMMONIA SAFETY..... 7
FIRST AID..... 11
OPERATING AND INSTALLATION INSTRUCTIONS FOR THE A-HFC-114..... 13
PURGING INSTRUCTIONS FOR REPHASING CYLINDERS..... 18
TOOLBAR LAYOUTS..... 19
CYLINDERS..... 21
HOSE STAND ASSEMBLY..... 22
SINGLE FOLD TOOLBAR-CYLINDERS AND PINS..... 23
DOUBLE FOLD TOOLBAR-CYLINDERS AND PINS..... 24
FRONT FOLD TOOLBAR-CYLINDERS AND PINS..... 25
WING LOCK OPTIONS..... 26
TOOLBAR LIGHT KIT..... 27
PARKING STAND..... 28
REAR HITCH, HD..... 29
QUICK COUPLER SWIVEL MOUNT..... 30
PIN TYPE GAUGE WHEEL..... 31
4410086, 888 6-BOLT HUB ASSEMBLY..... 32
INLINE TRANSPORT..... 33
110462 GAUGE WHEEL..... 34
4410171 INDEPENDENT STYLE DISC SEALER..... 35
4410171 OS INDEPENDENT STYLE DISC SEALER WITH OFFSET ARMS..... 36
4410223 HEAVY DUTY DISC SEALER..... 37
4410223 OS HEAVY DUTY DISC SEALER WITH OFFSET ARMS..... 38
4410185 INDEPENDENT STYLE DISC SEALER WITH 14.5 INCH ARMS..... 39
HD DISC SEALER WITH 14.5 INCH ARM..... 40
4410737, EDGE HEAVY DUTY DISC SEALER..... 41
STANDARD SHANKS AND KNIVES..... 42
S1264SL SPRING LOADED SHANK CLAMP, 4 X 6..... 43
4410707 EDGE SPRING LOADED SHANK CLAMP, 4X6, COMPLETE 44
YETTER 20” COULTER ASSEMBLY..... 45
GROVE COULTER ASSEMBLY..... 46
INSTALLATION INSTRUCTIONS FOR AG LIGHTS..... 47
DECAL LAYOUT..... 48
PARTS ORDERING PROCEDURE..... 49

TO YOU, THE OWNER

Your Dalton Ag Equipment is the most modern, up-to-date, versatile, machine available for fertilizer application. The machine is the result of many years of experience, research, development and testing of equipment for fertilizer application. It is soundly engineered and carefully built to rigid specifications. It is of rugged and simple construction, with a minimum of moving parts.

However, to obtain maximum performance from your Dalton Ag Equipment, it is necessary to follow the instructions and safety suggestions in this manual. Each section has been carefully prepared for the purpose of providing needed and valuable information to the owner and operator. Each operator of this unit should be familiar with the contents of this manual. Keep it in a safe and convenient location. THERE ARE MANY SAFETY SUGGESTIONS (CAUTION AREAS) PRINTED THROUGHOUT THIS MANUAL. CAREFULLY READ THEM ALL BEFORE OPERATING THIS UNIT.

DESIGN IMPROVEMENTS

Dalton Ag Products follows a policy of continuous products improvement. We therefore reserve the right to make design improvements, and changes in specifications and prices, without incurring obligations to make revisions or additions to equipment previously sold.

REGISTER WARRANTY ONE OF FOUR WAYS

- Register on-line at:
  www.daltonag.com
- Fax your completed warranty registration form to:
  641-333-4429
- Email your completed warranty registration form to:
  office@daltonag.com
- Mail your completed warranty registration form to:
  Dalton Ag, Inc.
  P.O. Box 70
  Lenox, IA 50851

LIMITED WARRANTY STATEMENT

DALTON AG PRODUCTS warrants to the original purchaser only that all products manufactured under the Dalton Ag and Mobility Brands will be free from defects in material and workmanship under normal use and service.

DALTON AG's obligation under this warranty is limited to repairing or replacing, as it may elect, free of charge and without charge for installation, at the place of business of a dealer or distributor authorized to handle the equipment covered by this warranty or at a DALTON AG facility, any parts that prove, in DALTON AG's judgment, to be defective in material or workmanship within two (2) years after delivery to the original purchaser. DALTON AG shall not be liable for personal injuries or any special or consequential damages of any kind, either direct or indirect. This warranty is subject to acts of God, fire and existing conditions of supply and demand, production, ability or inability to deliver, or for any other valid reason beyond the reasonable control of DALTON AG. No distributor, dealer, agent or DALTON AG employee (other than DALTON's President in writing) is authorized to extend or make any other or further express or implied warranty or incur any additional obligation on DALTON AG's behalf in connection with the sale of this product.

Customer Responsibility

Product Registration - It is a condition of this warranty that the original purchaser fill out the warranty card furnished by DALTON AG and return it to DALTON AG to be recorded in DALTON AG's owner file. Registration may also be done on line at www.DaltonAg.com/warrantyregistration. If the original purchaser's card or electronic registration is not on file at DALTON AG's office, the warranty period will extend only from date equipment was picked up or shipped from the DALTON AG plant.

Maintenance - It is the customer's responsibility to maintain their equipment in accordance with the instructions provided in the Operator's Manual. DALTON AG recommends that you keep records and receipts as the customer may be required to verify the maintenance instructions have been followed.

Operation – It is the customer's responsibility to operate the equipment only for the purpose for which it was designed and in accordance with all safety and operational recommendations contained in the Operator's Manual. If a defect in materials or workmanship occurs, it is the customer's responsibility to cease operating the equipment until authorized repairs are made**.** **Damage incurred from continued operation after a defect is discovered may not be covered by this warranty.**

What this Warranty Covers

This warranty covers failures caused by defects in materials or workmanship only.

This Warranty does not cover failures caused by:

- Improper operation
- Natural calamities
- Unauthorized modifications
- Unauthorized repairs
- Use of Non DALTON AG parts
- Neglected maintenance
- Usage contrary to the intended purpose of the product

This Warranty does not cover replacement of Wear or Maintenance Items including, but not limited to:

- Lubricants
- Filters
- Hoses
- Tires
- Disks
- Chains
- Idlers
- Blades
- Belts
- Bearings

This Warranty does not cover:

Pickup and delivery of the equipment
Service Calls or Travel Time to and from sites
Rental of replacement equipment during repair period
Products that have been declared a total loss and subsequently salvaged
Overtime labor charges

Parts Warranty

DALTON AG warrants its replacement parts against defects in materials or workmanship for a period of 90 days or the remainder of the product warranty, whichever is longer under the terms set out above. Remedy for defective replacement parts for units that are beyond the original product warranty, will be limited to replacement of the failed part.

DaltonAg.com 602 E. Van Buren Lenox, Iowa 50851 **PHONE: 800.342.7498**
FAX: 641.569.7033

NEW MACHINE CHECKOUT

1. All hardware properly tightened.
2. Lubrication of grease fittings.
3. Wheel bolts tightened to proper specs.
4. Check hydraulic hoses and fittings.

MAINTENANCE

1. Visually inspect machine daily.
2. Repair or replace any worn or damaged parts.

LUBRICATION SCHEDULE

Careful observance of the following lubrication schedule is the best preventative maintenance program for your Dalton Ag Equipment. We recommend that you establish a firm program to insure lubrication in strict compliance with the following schedule. Use only good grade pressure gun type grease unless otherwise specified.

Daily Lubrication

Hinge points

Weekly Lubrication

Wheel bearings
Coulters

Annual Lubrication

Check all bearings - repack or replace as needed

IMPLEMENT SAFETY

In addition to design and configuration of equipment, safety and accident prevention are dependent upon the awareness, concern, and proper training of personnel involved in the operation, transport, maintenance, and storage of equipment. Failing to follow these safety messages can result in machine damage, personal injury, and/or death.

- Before operating your DALTON AG equipment, thoroughly read and understand your operator's manual. If you do not understand any portion of the operator's manual, contact your local Dalton Ag dealer immediately for clarification.
- Furnish this manual to a new operator.
- Tow with tractor only. Never transport equipment in excess of 20 MPH. Maintain a safe speed.
- Use a Slow-Moving-Vehicle (SMV) emblem when transporting.
- Be sure safety decals are readable. All safety related decals must be replaced if the equipment is painted or the decals are otherwise rendered unreadable.
- Install transport link before transporting.
- Always check for overhead obstacles in transporting equipment and before folding or unfolding the wings of the unit.
- Never permit riders on the equipment or tractor.
- Proceed slowly on rough or slippery roadways, on side hills, and around curves to avoid tipping.
- Reduce speed when approaching ditches and corners. Do not make sharp turns with brakes.
- Machinery should be operated only by persons familiar to the tractor, equipment, and the safety related items.
- Do not stand on, or straddle tongue when unhitching.
- Do not modify or permit anyone to modify this equipment and any of its components without first consulting your Dalton Ag dealer.
- Do not lubricate, adjust, or repair when equipment is in motion.
- Use only approved replacement parts.
- To prevent serious injury from high pressure fluid, NEVER attempt to inspect, service, or disassemble any part of the hydraulic system until all pressure is relieved by lowering the toolbar to the ground (or secure with cylinder transport stops provided).
- High-pressure fluid is nearly invisible but has enough force to penetrate the skin. Never use the hands to search out a suspected leak. If injured by escaping fluid, obtain medical attention at once to minimize chance of infection. Wear safety glasses or goggles to avoid eye injury when working on the hydraulic system.
- Always check torque on wheel bolts before transporting.

PRE-SEASON CHECK

1. Carefully review the safety suggestions in this manual.

2. Check all bolts for proper tightness. When the implement is new, check after one hour and every few hours of operation.

3. Replace ground tools that are severely worn, broken or damaged.

4. Check tires for proper inflation. All tires should be inflated equally to avoid side draft.

5. Check the wheel lug bolts daily, keep wheel bolts tight.

6. Grease all fittings.

7. Inspect, repack, or replace (if necessary) wheel bearings and seals.

8. Check hoses, hose routing and hydraulic cylinders. Any indication of leakage or fraying of hoses should be corrected.

OFF-SEASON STORAGE

Following these suggestions will extend service life and satisfaction:

1. A little time and effort spent cleaning your machine before storing will repay in longer service, easier operation and higher resale value.

2. Inspect for worn or damaged parts. Replace, if required, and avoid delays the next season.

3. Repaint all areas where the original paint is worn off.

4. Lubricate your implement.

5. Grease all exposed metal surfaces of ground tools.

6. Store the unit inside a shed to protect from weather and on a level area with wings down. The ground working parts should rest on boards.

7. Disconnect the rod end of the lift cylinders and retract the rod into the cylinder to prevent the cylinder rod from rusting.

8. Cap or plug all hydraulic oil lines, if the cylinders are removed. This is to prevent any contaminants from entering the hydraulic system.

9. Raise tires off ground or remove and store in cool dry location out of sunlight.

IMPORTANT : Over tightening hardware can be as damaging as under tightening. Tightening beyond recommended torque will reduce the fastener's shock load capacity.

BOLT TORQUE CHART

SIZE	SAE GRADE 2 ASSEMBLY TORQUE DRY	SAE GRADE 2 ASSEMBLY TORQUE LUBRICATED	SAE GRADE 5 ASSEMBLY TORQUE DRY	SAE GRADE 5 ASSEMBLY TORQUE LUBRICATED	SAE GRADE 8 ASSEMBLY TORQUE DRY	SAE GRADE 8 ASSEMBLY TORQUE LUBRICATED	L9 ASSEMBLY TORQUE LUBRICATED
1/4-20	66*	49*	8	75*	12	9	11
1/4-28	76*	56*	10	86*	14	10	13
5/16-18	11	8	17	13	20	18	21
5/16-24	12	9	19	14	25	20	23
3/8-16	20	15	30	23	45	30	33
3/8-24	23	17	35	25	50	35	38
7/16-14	30	24	50	35	70	55	60
7/16-20	35	25	55	40	80	60	65
1/2-13	50	35	75	55	110	80	95
1/2-20	55	40	90	65	120	90	105
9/16-12	65	50	110	80	150	110	140
9/16-18	75	55	120	90	170	130	150
5/8-11	90	70	150	110	220	170	185
5/8-18	100	80	180	130	240	180	205
3/4-10	160	120	260	200	380	280	290
3/4-16	180	140	300	220	420	320	355
7/8-9	190	140	400	300	600	460	505
7/8-14	210	155	440	320	660	500	585
1-8	220	160	580	440	900	680	775
1-14	240	170	640	480	1000	740	900
1 1/8-7	300	220	800	600	1280	960	1150
1 1/8-12	340	260	880	660	1440	1080	1325
1 1/4-7	420	320	1120	840	1820	1360	1600
1 1/4-12	460	360	1240	920	2000	1500	1750
1 3/8-6	560	420	1460	1100	2380	1780	-----
1 3/8-12	640	460	1680	1260	2720	2040	-----
1 1/2-6	740	560	1940	1460	3160	2360	3250
1 1/2-12	840	620	2200	1640	3560	2660	3650

ITEMS WITH * = INCH POUNDS
ALL OTHERS = FOOT POUNDS

WARNING: Never work around any raised implement while in the raised position without using safety lockups.

ANHYDROUS AMMONIA SAFETY

(Source: Pennsylvania State University. Agricultural Safety and Health)

Anhydrous ammonia (NH3) is a nitrogen crop fertilizer that can cause severe chemical burns; frostbite to the eyes, skin, and respiratory tract; and death. It is important for all individuals working with this type of fertilizer to understand the potential risks, necessary safety precautions, and proper response in the event of accidental contact.

Anhydrous ammonia is a hygroscopic compound, meaning that it takes up water from the nearest source, which can include the human body—especially the eyes, lungs, and skin because of their high moisture content. Anhydrous ammonia is caustic, corrosive, and damaging to tissue high in moisture content when it contacts the human body. Anhydrous ammonia inhalation incidents are typically severe because the victim's throat can swell shut, causing suffocation. When vapors or liquid come in contact with a person's eyes, blindness may occur.

Typically, anhydrous ammonia is stored under pressure, but it vaporizes to a colorless gas. It has a unique odor that can be detected at a low concentration of 5 ppm. The concentration in fertilizer is approximately 1,000,000 ppm, but even brief exposure to a concentration of 2,500 to 6,500 ppm can result in death.

Anhydrous ammonia is transported under pressure as a liquid, so all equipment used for transport must be designed for use under high pressure to avoid ruptures or breaks. Incidents can occur when anhydrous ammonia escapes from transfer hoses or valves, equipment malfunctions and sprays anhydrous ammonia in multiple directions, hoses pull apart during transportation or application, and so on.

PPE and Supplies

It is essential that all workers who use anhydrous ammonia wear the appropriate personal protective equipment (PPE), be equipped with necessary response supplies, and know how to respond in an emergency. PPE should include ventless goggles or a full-face shield, rubber gloves with long cuffs that can be rolled to catch drips, and a long-sleeved shirt. Non-rubber gloves made of ammonia-proof material are acceptable. Because contact lenses can trap the gas and become fused to the eye, it is recommended that individuals not wear contact lenses while working with anhydrous ammonia.

In the event of an exposure emergency, the most important resource is an ample supply of clean water to begin flushing the eyes and skin. If you use a vehicle to transport anhydrous ammonia, you must carry a 5 gal. container of clean water. Each person working with anhydrous ammonia should carry a 6 to 8 fl. oz. squeeze bottle of water at all times for rapid response to an emergency.

Basic First Aid for Anhydrous Ammonia Exposure

The first-response treatment for anhydrous ammonia exposure is to flush the exposed area (skin, nose, throat, eyes, and so on) with clean water for a minimum of 15 minutes.

- Flush the exposed area immediately to decrease injury caused by the anhydrous ammonia coming in contact with skin or clothes. Although clean water is the ideal resource for flushing exposed areas of the body, if you do not have water available, other nontoxic liquids, such as cold coffee or orange juice, can be used.

- Remove contaminated clothing unless the clothing is frozen to the victim's skin.

- Seek medical attention immediately and inform medical staff of the exposure to anhydrous ammonia so that they will not treat the wounds with oils or ointments that can intensify the damage.

If you find a person who is in a continuous stream of anhydrous ammonia, contact your local emergency service responders or 911. Inform the emergency medical responders about the type of incident so they can bring the proper equipment to the scene. A self-contained breathing apparatus (SCBA) and protective clothing are necessary to remove a person from a continuous stream. Rescue workers will contact a hazardous materials (HAZMAT) disposal team if HAZMAT services are needed at the scene.

Note that these guidelines are not comprehensive, and all individuals working with anhydrous ammonia should receive training in the proper response to exposure emergencies.

Storage and Transportation

Anhydrous ammonia is a strong alkali that, when dissolved in water, readily reacts with copper, zinc, brass, and other alloys. Therefore, the only types of containers, fittings, and piping that should come in contact with anhydrous ammonia should be non-galvanized steel or iron. Do not store other materials, such as propane or liquefied petroleum gas, in a tank that has been used to store anhydrous ammonia.

When filling your anhydrous ammonia tank, do not fill it more than 85% full, and always disconnect the fill hose before moving the tank. Remember to bleed pressurized anhydrous ammonia from the hose before connecting or disconnecting the hose.

When transporting anhydrous ammonia, be sure to adhere to the following precautions and safety rules:

- **Running Gear:** Regularly inspect the wagon’s frame tongue, reach poles, anchor devices, wheel bearings, knuckles, ball joints, and pins for structural damage and wear and make necessary repairs and adjustments.

- **Tires:** Check tires for proper inflation, bald spots, and signs of wear and ensure that lug nuts are tight.

- **Hoses and Valves:** Inspect and replace hoses and valves as needed.

    - The hydrostatic relief valve should be replaced every five years.
    - The transfer hose should be replaced five years from the date of manufacture.

- **Lubrication:** Annually lubricate the wagon's knuckle, wheels, tongues, and so on.

- **Towing Vehicle:** To increase the driver's ability to control the towing vehicle, ensure that the towing vehicle weighs at least as much as the tank.

    - A tractor can tow two tanks, but a truck can tow only one tank at a time.

- **Speed Limit:** When towing an anhydrous ammonia tank, observe a speed limit of 25 mph.

- **Hitch Pin:** Use a hitch pin with a safety chain when towing a tank wagon.

- **Warning Lights:** Ensure that the tank is equipped with a seven-terminal breakaway connector plug to properly operate turn signals, flashing warning lights, and a red brake light.

- **Safety Signage:** If operating on a highway, outfit the tank with all required safety markings, including a slow-moving vehicle (SMV) sign.

    - The words *Anhydrous Ammonia* must appear on both sides of the tank and on the rear of the tank in letters 4 in. high. The words should be in contrast to the tank so that they can be read easily.

    - *Inhalation Hazard* must appear on both sides of the tank in letters 3 in. high.

    - A Department of Transportation (DOT) placard number 1005 for nonflammable gas should be placed on the front, back, and sides of the tank.

Additional Safety Recommendations

- Paint the tank with reflective white paint to decrease excessive pressure buildup that can occur when the tank is heated from direct sunlight.

- Do not use dented or damaged tanks until they have been checked by an authorized inspector and necessary repairs are completed.

- Allow only certified welders to perform welding on the tank.

- Regulations and codes regarding towing of anhydrous ammonia and signage may vary, so be familiar with and obey the regulations in your state.

Summarized by:

Linda M. Fetzer, Pennsylvania State University – lmf8@psu.edu

Reviews:

LaMar Grafft, University of Iowa – lamar-grafft@uiowa.edu
Dennis J. Murphy, Pennsylvania State University – djm13@psu.edu
J. Samuel Steel, Pennsylvania State University – jss13@psu.edu
Aaron M. Yoder, University of Nebraska Medical Center - aaron.yoder@unmc.edu

Use the following format to cite this article:

Anhydrous ammonia safety. (2012) Farm and Ranch eXtension in Safety and Health (FReSH) Community of Practice. Retrieved from http://www.extension.org/pages/63196/anhydrous-ammonia-safety.

Sources

Schwab, C., Hanna, M., & Miller, L. (2008) Anhydrous ammonia safety: Play it safe with anhydrous ammonia. Iowa State University Extension and Outreach. Retrieved from https://store.extension.iastate.edu/ItemDetail.aspx?ProductID=4989.

Training module: Safe handling of anhydrous ammonia (NH3). (2002) Ohio State University Extension. Retrieved from http://nasdonline.org/1731/d001719/safe-handling-of-anhydrous-ammonia-nh....

Training module: Towing anhydrous ammonia tanks. (2002) Ohio State University Extension Agricultural Tailgate Safety Training. Retrieved from http://nasdonline.org/1794/d001750/towing-anhydrous-ammonia-tanks.html

FIRST AID

Decontaminate the victim as quickly as possible. Start with the eyes. The whole body, or exposed area, must be flushed with generous amounts of water; this includes the hair, ears, under the chin, and armpits. Water sources such as showers, hoses, eye wash stations, or stock tanks are acceptable [29 CFR 1910.151(c)]

Ensure trained personnel and adequate first aid supplies are readily available [29 CFR 1910.151(b)]

Eyewash Station

Contact with the Eyes

Even if only a small amount of ammonia enters the eyes, irrigate the eyes with an abundance of water for a minimum of 15 minutes. Continually and thoroughly flush the entire eye surface and the inner lining of the eyelids. Eyes affected by ammonia close involuntarily, so the eyelids must be held open so that water can flush the entire eye surface, as well as the inner lining of the eyelid.

If there is no physician available, continue irrigation for an additional 15 minutes.

Do not wear contact lenses when handling anhydrous ammonia. If ammonia gets in the eyes, the ammonia will get trapped under the lenses causing even more damage. They may also prevent immediate flushing of the eye surface.

Serious eye injury should be treated by an ophthalmologist, but in an emergency, wash with large quantities of water for 15 minutes or more as quickly as possible. In fact, the only real hope for preventing permanent eye injury lies in quick and generous washing.

One suggestion for those likely to be exposed is to carry a small, eight-ounce squeezable squirt bottle filled with water, which can be used to get excess ammonia out of the eyes until a larger water supply can be reached. This small amount of water is not sufficient to remove all the ammonia. It is essential that the eyes be irrigated for a minimum of 15 minutes as soon as possible.

Squirt Bottle

Another emergency method is to duck the head in water and rapidly blink and move or rotate the eyes about.

Contact with the Skin

It is essential that any ammonia spilled on the worker be removed immediately and that the worker be moved to an uncontaminated area quickly.

Clothes that have been saturated by liquid ammonia may freeze to the skin. In any case, the victim, still clothed, should get immediately under a shower, if available, or jump into a stock tank, pond, or into any other source of water. Time is important! Remove clothes only after they are thawed and they can be freely removed from frozen areas. If the clothing is removed incorrectly, whole sections of skin can be torn off.

No salves, creams, ointments, or jellies should be applied to the skin during a 24-hour period following the injury since this will prevent natural elimination of the ammonia from the skin. After the 24 hour period, the medical treatment is the same for thermal burns. A physician should view any second- or third-degree freeze burns of the skin.

Taken Internally: This is what you should do if ammonia is ingested:

- Call a physician.
- If conscious, have the victim drink large amounts of water.
- Do not induce vomiting if the victim is in shock, in extreme pain, or is unconscious.
- If vomiting begins, place the victims face down with head lower than hips. This prevents vomit from entering the lungs and prevents severe injury.

Inhalation

In all inhalation exposures, severe or minimal:

- Take the exposed workers at once to a clean, uncontaminated area.
- Watch workers exposed to low concentrations for a short period of time. They will usually require no treatment and can be released.
- For severe exposure to higher concentrations:

  Call a physician.

  Administer oxygen by an individual who is trained and authorized to do so by a physician. This will help relieve pain and symptoms of lack of oxygen.

  Begin artificial respiration immediately if the patient is not breathing.

  Keep victim warm (but not hot) and rested until transported to the hospital.

Summary: In any accident involving contact with ammonia with the eyes or skin:

- Immediately flush the affected area with large quantities of clean water.
- Place the injured person into a container of clean water or under an emergency shower.
- Provide the injured worker with first aid treatment and call a physician at once in the case of extreme exposure. Give the physician a complete account of the incident.
- Seconds count, wash the ammonia away with water immediately.

Information from U.S. Department of Labor - OSHA
https://www.osha.gov/SLTC/etools/ammonia_refrigeration/emergency/index.html#firstaid

OPERATING AND INSTALLATION INSTRUCTIONS FOR THE A-HFC-114 HIGH FLOW TOOL BAR COUPLING

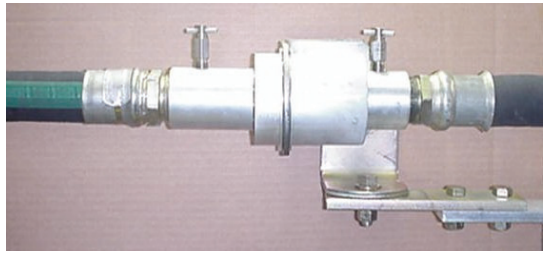

CAUTION DANGER

PLEASE READ THIS ENTIRE MANUAL AND FOLLOW THE INSTRUCTIONS CAREFULLY. FAILURE TO READ AND FOLLOW ALL OF THE INSTRUCTIONS AND WARNINGS IN THIS MANUAL MIGHT RESULT IN A DANGEROUS RELEASE OF ANYDROUS AMMONIA AND CAUSE SERIOUS BODILY INJURY.

TABLE OF CONTENTS

New installation instruction	page 3-5
Retro fit installation instructions	page 5-7
Reconnection instructions	page 7-9
Disconnection instructions	page 9
Maintenance instructions	page 9-10

CAUTION DANGER

ALLWAYS FOLLOW MANUFACTURES INSTRUCTIONS WHEN INSTALLING, DISCONNECTING OR RECONNECTING THE QUICK COUPLING. FAILURE TO DO SO MAY CAUSE BODILY INJURY.

ALWAYS FOLLOW STEPS 1-3 BELOW BEFORE PERFORMING MAINTENANCE, INSTIALLATION, RECONNECTING OR DISCONNECTING THE QUICK COUPLING

1. **ALLWAYS WEAR GOGGLES AND GLOVES AND HAVE EMERGENCY WATER AVAILABLE.**
2. **CLOSE ALL VALVES.**
3. **OPEN ALL BLEED VALVES AND DRAIN ALL OF THE AMMONIA FROM THE HOSES ATTACHED TO THE TANK AND THE APPLICATOR. ALWAYS BE CAREFUL WHEN OPENING A BLEED VALVE TO MAKE SURE THE OUTLET IS POINTING IN A SAFE DIRECTION AND AWAY FROM YOU OR ANYONE ELSE. DO NOT PROCEED UNTIL YOU HAVE MADE SURE ALL OF THE AMMONIA HAS BEEN DRAINED FROM ALL OF THE HOSES.**

NEW INSTALLATION INSTRUCTIONS

1.

1. ALLWAYS WEAR GOGGLES AND GLOVES AND HAVE EMERGENCY WATER AVAILABLE.
2. CLOSE ALL VALVES.
3. OPEN ALL BLEED VALVES AND DRAIN ALL OF THE AMMONIA FROM THE HOSES ATTACHED TO THE TANK AND THE APPLICATOR. ALWAYS BE CAREFUL WHEN OPENING A BLEED VALVE TO MAKE SURE THE OUTLET IS POINTING IN A SAFE DIRECTION AND AWAY FROM YOU OR ANYONE ELSE. DO NOT PROCEED UNTIL YOU HAVE MADE SURE ALL OF THE AMMONIA HAS BEEN DRAINED FROM ALL OF THE HOSES.
4. ATTACH THE MOUNTING CLAMP ON TO THE TOOL BAR BY DRILLING TWO 17/32 INCH HOLES ON 2" CENTERS. MAKE SURE IT IS MOUNTED ONTO A PORTION OF THE TOOL BAR THAT IS ATLEAST 1/4" THICK. ATTACH THE TWO 1/2" BOLTS AND NUTS SECURELY TO THE CLAMP AND TOOL BAR AND TIGHTEN FIRMLY. THE FEMALE SIDE OF THE COUPLING WILL ALREADY BE ATTACHED TO THE MOUNTING BRACKET BUT MAKE SURE THE COUPLING IS INSTALLED ON THE CORRECT SIDE OF THE BRACKET AS SHOWN IN THE PHOTO BELOW.

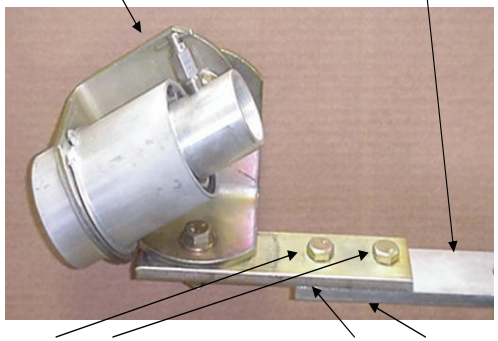

****

MAKE SURE YOU HAVE AT LEAST 18" OF SLACK IN THE SECTION OF HOSE CONNECTING THE A-HFC-114 TO THE APPLICATION EQUIPMENT MOUNTED ON THE TOOL BAR TO ALLOW SUFFICENT ARTICULATION OF THE UNIT.

****

5. SCREW THE APPLICATOR HOSE INTO THE FEMALE END OF THE COUPLING AND MAKE SURE TO USE PIPE THREAD SEALANT AS SHOWN IN THE PHOTO BELOW

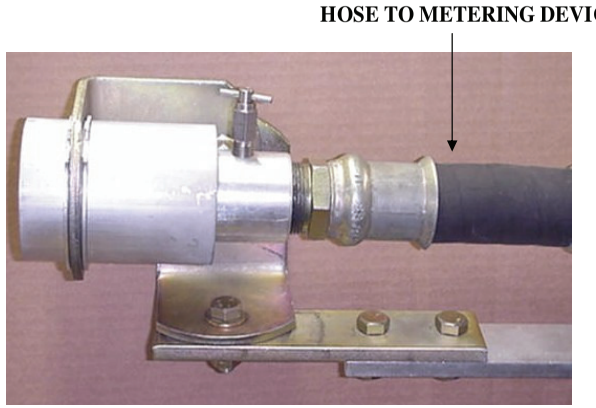

6. IF YOUR SUPPLY HOSE IS ATTACHED TO THE NURSE TANK, SCREW AN ACME ADAPTOR INTO THE 1-1/4" FNPT OF THE MALE END OF THE COUPLING. MAKE SURE TO USE PIPE THREAD SEALANT AS SHOWN IN THE PHOTO BELOW

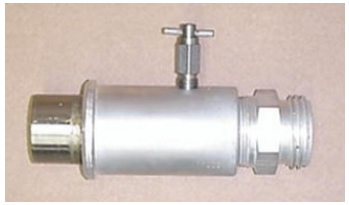

7. IF YOUR SUPPLY HOSE IS ATTACHED TO THE TOOL BAR THEN SCREW THE SUPPLY HOSE INTO THE 1-1/4" FNPT SIDE OF THE MALE END OF THE COUPLING. AS SHOWN IN THE PHOTO BELOW.

8. ATTACH THE OPERATING INSTRUCTION DECAL TO THE TOOL BAR AS CLOSE TO THE A-HFC-114 AS POSSIBLE

9. FOR CONNECTING THE MALE AND FEMALE ENDS OF THE COUPLING TOGETHER SEE THE "RECONNECTION INSTRUCTIONS" SECTION BELOW.

RETRO-FIT INSTALLATION INSTRUCTIONS

1. ALLWAYS WEAR GOGGLES AND GLOVES AND HAVE EMERGENCY WATER AVAILABLE.
2. CLOSE ALL VALVES.
3. OPEN ALL BLEED VALVES AND DRAIN ALL OF THE AMMONIA FROM THE HOSES ATTACHED TO THE TANK AND THE APPLICATOR. ALWAYS BE CAREFUL WHEN OPENING A BLEED VALVE TO MAKE SURE THE OUTLET IS POINTING IN A SAFE DIRECTION AND AWAY FROM YOU OR ANYONE ELSE. DO NOT PROCEED UNTIL YOU HAVE MADE SURE ALL OF THE AMMONIA HAS BEEN DRAINED FROM ALL OF THE HOSES.
4. REMOVE THE OLD COUPLING AND THE LAST "L" SHAPED BRACKET FROM THE UNIT AS SHOWN IN THE PHOTO BELOW.

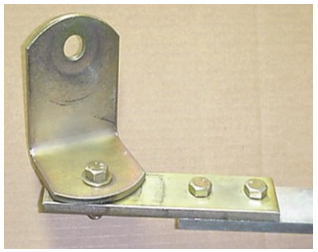

5. THERE ARE 2 DIFFERENT SIZE BRACKETS THAT PIONEER HAS USED WITH THEIR COUPLING. THE OLDER BRACKET HAS A 1/2" BOLT HOLE AND THE NEWER ONE HAS A 3/4" BOLT HOLE. AS SHOWN IN THE PHOTO BELOW.

SMALL 1/2" BOLT HOLE BRACKET

BIG 3/4" BOLT HOLE BRACKET

6. IF YOU HAVE THE 1/2" BOLT HOLE BRACKET USE THE SHORT BUSHING, IF YOU HAVE THE 3/4" BOLT HOLE BRACKET USE THE LONG BUSHING AS SHOWN IN THE PHOTO BELOW.

LONG BUSHING SHORT BUSHING

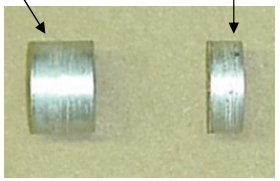

7. ATTACH THE BRACKET WITH THE 1/2" BOLT, WASHERS AND NUT WITH THE CORRECT BUSHING AS SHOWN IN THE PHOTO BELOW AND TIGHTEN FRIMLY. MAKE SURE YOU PUT THE BUSHING ON THE COUPLER BRACKET NOT THE MIDDLE BRACKET AS SHOWN IN THE PHOTO.

BUSHING ON COUPLING BRACKET

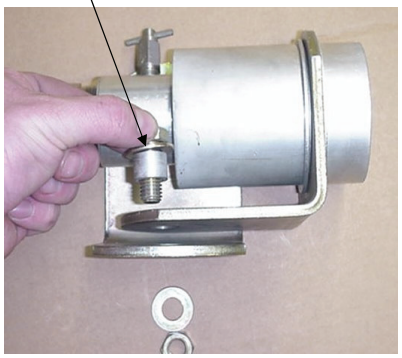

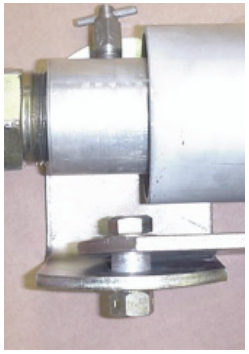

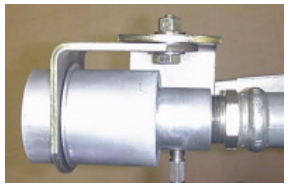

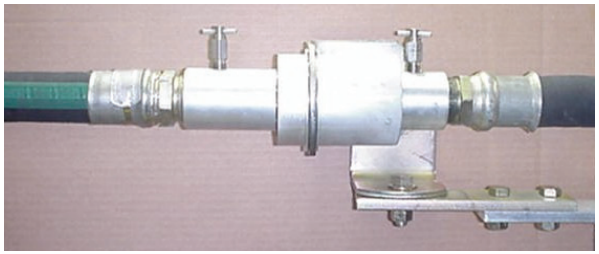

8. ****IMPORTANT**** MAKE SURE THE BRACKET SWIVELS UP AND DOWN AND SIDE TO SIDE 80 DEGREES TO EACH SIDE OF CENTER LINE. THERE SHALL BE NOTHING OBSTRUCTING THE SWIVEL FEATURE OF THIS UNIT. DO NOT INSTALL ANY APPARATUS; HOSE SUPPORT ANYTHING ELSE THAT WILL IMPEDE THE MOVEMENT OF THE BREAKAWAY. THIS IS VERY IMPORTANT, IF IT DOES NOT SWIVEL UP AND DOWN AND SIDE TO SIDE THEN IT WILL NOT FUNCTION PROPERLY.
9. AFTER YOU HAVE INSTALLED YOUR NEW COUPLING SEE THE "RECCONECTION INSTRUCTIONS" SECTION ABOVE TO CONNECT THE MALE END.

RECONNECTION INSTRUCTIONS

1. ALLWAYS WEAR GOGGLES AND GLOVES AND HAVE EMERGENCY WATER AVAILABLE.
2. CLOSE ALL VALVES.
3. OPEN ALL BLEED VALVES AND DRAIN ALL OF THE AMMONIA FROM THE HOSES ATTACHED TO THE TANK AND THE APPLICATOR. ALWAYS BE CAREFUL WHEN OPENING A BLEED VALVE TO MAKE SURE THE OUTLET IS POINTING IN A SAFE DIRECTION AND AWAY FROM YOU OR ANYONE ELSE. DO NOT PROCEED UNTIL YOU HAVE MADE SURE ALL OF THE AMMONIA HAS BEEN DRAINED FROM ALL OF THE HOSES.
4. INSPECT THE ORINGS TO MAKE SURE THEY ARE IN GOOD CONDITION. NEVER LOOK DIRECTLY INTO THE OPENING OF THE MALE OR FEMALE SIDE OF THE QUICK COUPLING. HOLD IT AT AN ANGLE AWAY FROM YOU TO DO THE INSPECTION SO IF ANY AMMONIA IS LEFT IN THE HOSE IT WILL NOT SPRAY ON YOU OR ANYONE ELSE. GREASE O-RINGS IF NECESSARY. SEE PHOTO BELOW

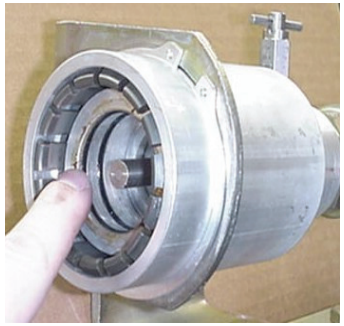

5. SLOWLY INSERT THE MALE END OF THE QUICK COUPLING THAT IS ATTACHED TO THE NURSE TANK HOSE INTO THE FEMALE END OF THE QUICK COUPLING THAT IS ATTACHED TO THE APPLICATOR. IT HELPS SOMETIMES TO TWIST THE MALE END WHEN INSERTING IT TO GET THE MALE TIP PAST THE ORINGS. THEN HOLD THE BRACKET ON THE FEMALE END FIRMLY WITH ONE HAND AND PUSH THE MALE END IN FIRMLY WITH THE OTHER HAND SO IT IS COMPLETELY ATTACHED BY CHECKING TO MAKE SURE THE LOCKING SHOULDER ON THE MALE END IS FULLY INSERTED INTO THE FEMALE END OF THE COUPLING. SEE PHOTO BELOW.

NOT INSTALLED CORRECTLY

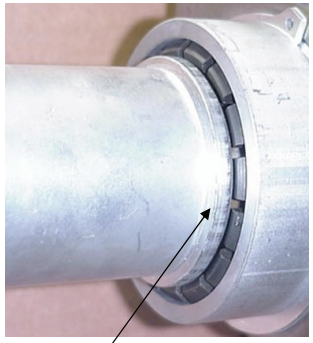

LOCKING SHOULDER NOT INSERTED

INSTALLED CORRECTLY

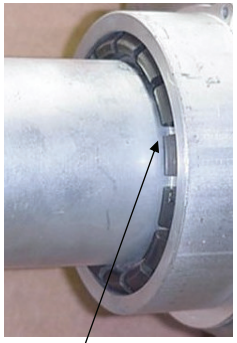

LOCKING SHOULDER INSERTED

LOCKING SHOULDER

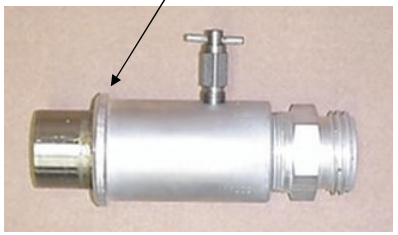

COMPLETELY INSTALLED UNIT

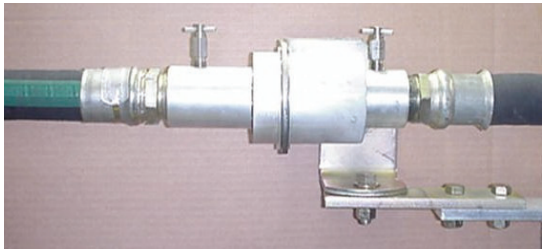

6. SHAKE HOSE TO MAKE SURE IT IS SECURELY ATTACHED.
7. CLOSE ALL BLEED VALVES

DISCONNECTION INSTRUCTIONS

1. ALLWAYS WEAR GOGGLES AND GLOVES AND HAVE EMERGENCY WATER AVAILABLE.
2. CLOSE ALL VALVES.
3. OPEN ALL BLEED VALVES AND DRAIN ALL OF THE AMMONIA FROM THE HOSES ATTACHED TO THE TANK AND THE APPLICATOR. ALWAYS BE CAREFUL WHEN OPENING A BLEED VALVE TO MAKE SURE THE OUTLET IS POINTING IN A SAFE DIRECTION AND AWAY FROM YOU OR ANYONE ELSE. DO NOT PROCEED UNTIL YOU HAVE MADE SURE ALL OF THE AMMONIA HAS BEEN DRAINED FROM ALL OF THE HOSES.
4. PULL THE NURSE TANK HOSE FIRMLY TO DISCONNECT THE MALE END OF THE QUICK COUPLING FROM THE FEMALE END.

MAINTENANCE INSTRUCTIONS

1. ALLWAYS WEAR GOGGLES AND GLOVES AND HAVE EMERGENCY WATER AVAILABLE.
2. CLOSE ALL VALVES.
3. OPEN ALL BLEED VALVES AND DRAIN ALL OF THE AMMONIA FROM THE HOSES ATTACHED TO THE TANK AND THE APPLICATOR. ALWAYS BE CAREFUL WHEN OPENING A BLEED VALVE TO MAKE SURE THE OUTLET IS POINTING IN A SAFE DIRECTION AND AWAY FROM YOU OR ANYONE ELSE. DO NOT PROCEED UNTIL YOU HAVE MADE SURE ALL OF THE AMMONIA HAS BEEN DRAINED FROM ALL OF THE HOSES.
4. PULL THE NURSE TANK HOSE FIRMLY TO DISCONNECT THE MALE END OF THE QUICK COUPLING FROM THE FEMALE END.
5. REMOVE THE HOSES FROM BOTH THE FEMALE END AND MALE END OF THE QUICK COUPLING SO THAT THE QUICK COUPLING IS NOT CONNECTED TO ANY HOSES.
6. INSPECT THE 2 O-RINGS IN THE FEMALE SIDE OF THE COUPLING FOR CUTS OR PITS IN THE O-RING. REPLACE THEM IF THERE ARE ANY CUTS OR PITS OR SEAM TO BE DRYED OUT OR AGING. IF THEY ARE IN GOOD SHAPE APPLY SOME GREASE TO THEM TO ENSURE THEY REMAIN IN GOOD CONDTION. NEVER LOOK DIRECTLY

INTO THE OPENING OF THE MALE OR FEMALE SIDE OF THE QUICK COUPLING. HOLD IT AT AN ANGLE AWAY FROM YOU TO DO THE INSPECTION SO IF ANY AMMONIA IS LEFT IN THE COUPLING IT WILL NOT SPRAY ON YOU OR ANYONE ELSE.

7. INSPECT THE CHECK VALVES IN THE MALE AND FEMALE ENDS OF THE QUICK COUPLING BY PRESSING IN ON THE CHECK VALVE WITH YOUR THUMB TO MAKE SURE THEY MOVE IN AND OUT FREELY.
8. CLEAN ANY DIRT OR DEBRIS THAT YOU FIND IN EITHER END OF THE COUPLING.
9. SPIN THE LOCKING COLLET IN THE FEMALE END OF THE QUICK COUPLING WITH YOUR FINGER TO MAKE SURE IT MOVES FREELY. USE WD-40 OR A SIMILAR PRODUCT IF NECESARY TO GET IT TO MOVE FREELY.
10. RECONNECT THE HOSES THAT WERE REMOVED AND FOLLOW THE "RECCONECTION INSTRUCTIONS" SECTION ABOVE TO RECCONECT THE QUICK COUPLING.

IF YOU HAVE ANY QUESTIONS PLEASE CALL US AT 800-537-5642

PURGING INSTRUCTIONS FOR REPHASING CYLINDERS

- To properly purge air from the system, cylinders should be fully extended to the rephasing mode.
- Hold the cylinders in the fully extended mode for approximately 30 seconds, retract the cylinders and repeat until all air is purged from the system. Make sure the tractor RPM is moderate so the hydraulic pump is at its full capacity.
- Initial system start-up should be done with the rod end of the cylinders unpinned, making sure to support the rod and watch that the rod will not interfere with any framework or other objects. During initial start-up, the seals may need a few cycles to seat themselves for a good seal.
- Patience is the key and air is the worst enemy. Never loosen a fitting to bleed off the system. This can be dangerous.
- To maintain the rephasing system during normal operating, the cylinders should always be cycled to the full extent of their stroke each time they are operated.

TOOLBAR LAYOUTS

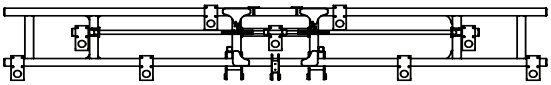

4400201 D3021-46 9K

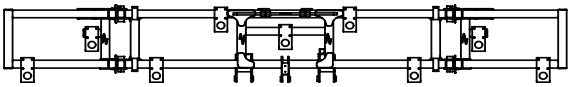

4400061 D3021-46 9K

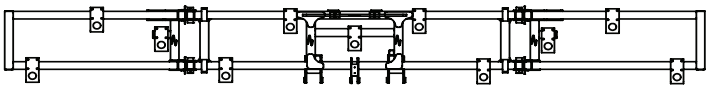

4400202 D3028-46 11K

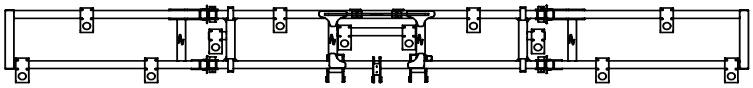

4400203 D3030-46 12K

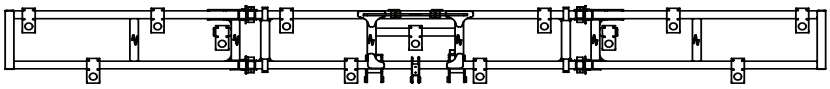

4400204 D3032-46 13K

DRAWN BY	RICH SMOTHERS	9/11/2015	Dalton USA AG PRODUCTS www.DaltonAg.com
CHECKED BY			
PRINT DATE	5/23/2017		
CONFIG.	Default		
COMMENTS:			DWG: 3 PT TOOLBARS - LAYOUT AND ROW UNIT PLACEMENT
			SIZE A / SHEET TITLE: Sheet1 / REV A
			SCALE: 1:86 / SHEET 1 OF 2

PROPRIETARY AND CONFIDENTIAL
THE INFORMATION CONTAINED IN THIS DRAWING IS THE SOLE PROPERTY OF DALTON AG. ANY REPRODUCTION IN PART OR AS A WHOLE WITHOUT THE WRITTEN PERMISSION OF DALTON AG IS PROHIBITED.

TOOLBAR LAYOUTS

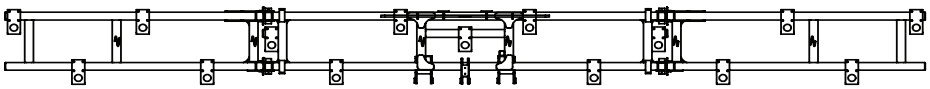

4400064 D3035-46 15K

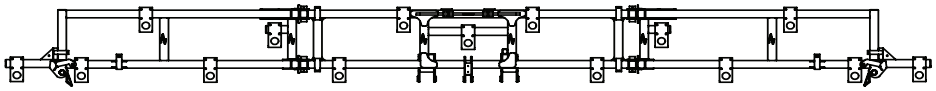

4400205 D3035-46 15K, FRONT FOLD

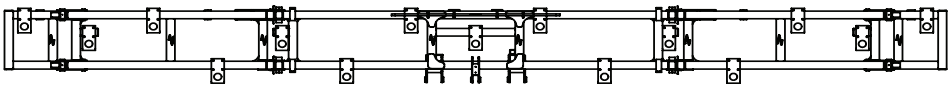

4400206 D3035-46 15K

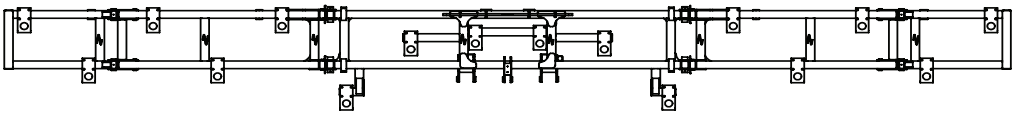

4400147 D3040-46 16K

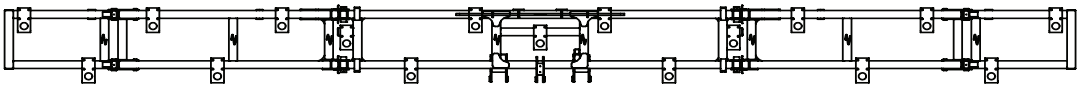

4400207 D3040-46 17K

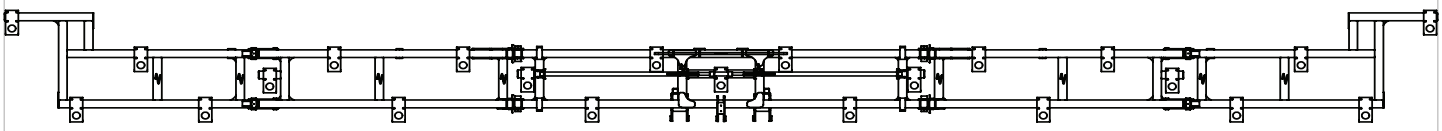

4400208 D3055-46 23K

DRAWN BY	RICH SMOTHERS	4/4/2014	
CHECKED BY			
PRINT DATE	5/23/2017		
CONFIG.	Default		

Dalton AG PRODUCTS USA
www.DaltonAg.com

PROPRIETARY AND CONFIDENTIAL
THE INFORMATION CONTAINED IN THIS DRAWING IS THE SOLE PROPERTY OF DALTON AG. ANY REPRODUCTION IN PART OR AS A WHOLE WITHOUT THE WRITTEN PERMISSION OF DALTON AG IS PROHIBITED.

COMMENTS:

DWG: 3 PT TOOLBARS - LAYOUT AND ROW UNIT PLACEMENT

SIZE	SHEET TITLE:	REV
A	Sheet2	A

SCALE: 1:86 SHEET 2 OF 2

D-SERIES 3PT TOOLBAR BUILD INFO

		Center & Wing Dimensions				Wing Cylinders		
Part #	Description	Center	Inboard	Outboard	Front Fold	Inboard	Outboard	Front Fold
	CLASS 1							
4400201	D3021-46 (9K)	252" (21')	N/A	N/A	N/A	3.50"x30"	N/A	N/A
4400061	D3021-46 (9K)	156" (13')	48"	N/A	N/A	3.50"x30"	N/A	N/A
4400202	D3028-46 (11K)	156" (13')	80"	N/A	N/A	3.50"x30"	N/A	N/A
4400203	D3030-46 (12K)	156" (13')	90"	N/A	N/A	3.50"x30"	N/A	N/A
4400204	D3032-46 (13K)	156" (13')	108"	N/A	N/A	3.50"x30"	N/A	N/A
	CLASS 2							
4400064	D3035-46 (15K)	186" (15.5')	120"	N/A	N/A	3.50"x30"	N/A	N/A
4400205	D3035-46 (15K)	156" (13')	108"	N/A	24"	4"x30"	N/A	3"x12"
4400206	D3035-46 (15K)	186" (15.5')	96"	24"	N/A	4"x30"	3.5"x30"	N/A
4400147	D3040-46 (16K)	168" (14')	96"	48"	N/A	4"x30"	3.5"x30"	N/A
4400207	D3040-46 (17K)	186" (15.5')	102"	48"	N/A	4"x30"	3.5"x30"	N/A
4400208	D3055-46 (23K)	192" (16')	118"	117"	N/A	4"x36"	4"x30"	N/A

HOSE STAND ASSEMBLY

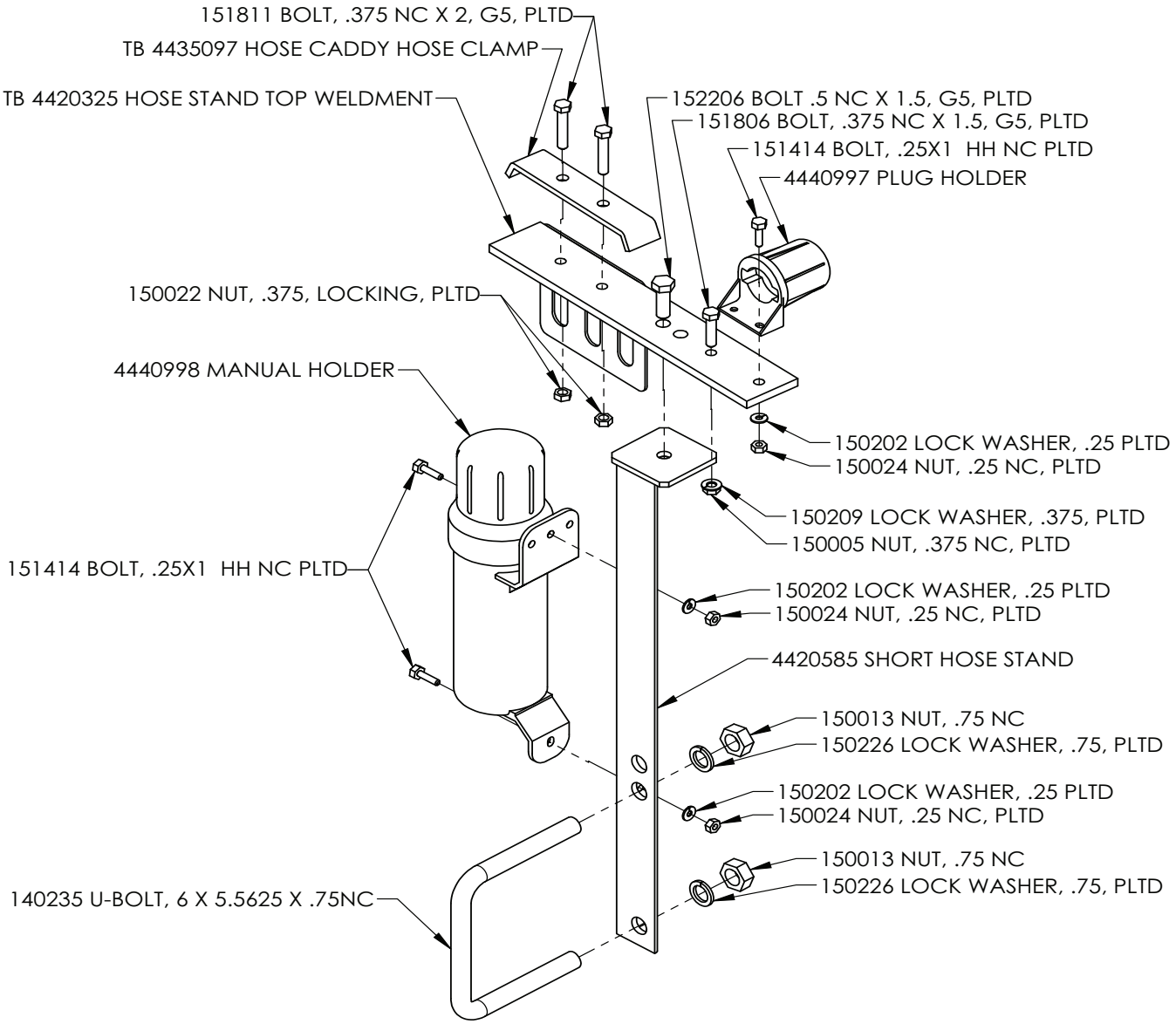

4410499 HOSE STAND, 3 PT

DRAWN BY	RICH SMOTHERS	9/10/2009	
CHECKED BY			
PRINT DATE	5/19/2017		
CONFIG.	Default		

Dalton AG PRODUCTS
www.DaltonAg.com

PROPRIETARY AND CONFIDENTIAL
THE INFORMATION CONTAINED IN THIS DRAWING IS THE SOLE PROPERTY OF DALTON AG. ANY REPRODUCTION IN PART OR AS A WHOLE WITHOUT THE WRITTEN PERMISSION OF DALTON AG IS PROHIBITED.

COMMENTS:

DWG: 3 PT HOSE STAND ASSEMBLY

SIZE	SHEET TITLE:	REV
A	Sheet1	A

SCALE: 1:6 SHEET 1 OF 1

SINGLE FOLD TOOLBAR - CYLINDERS & PINS

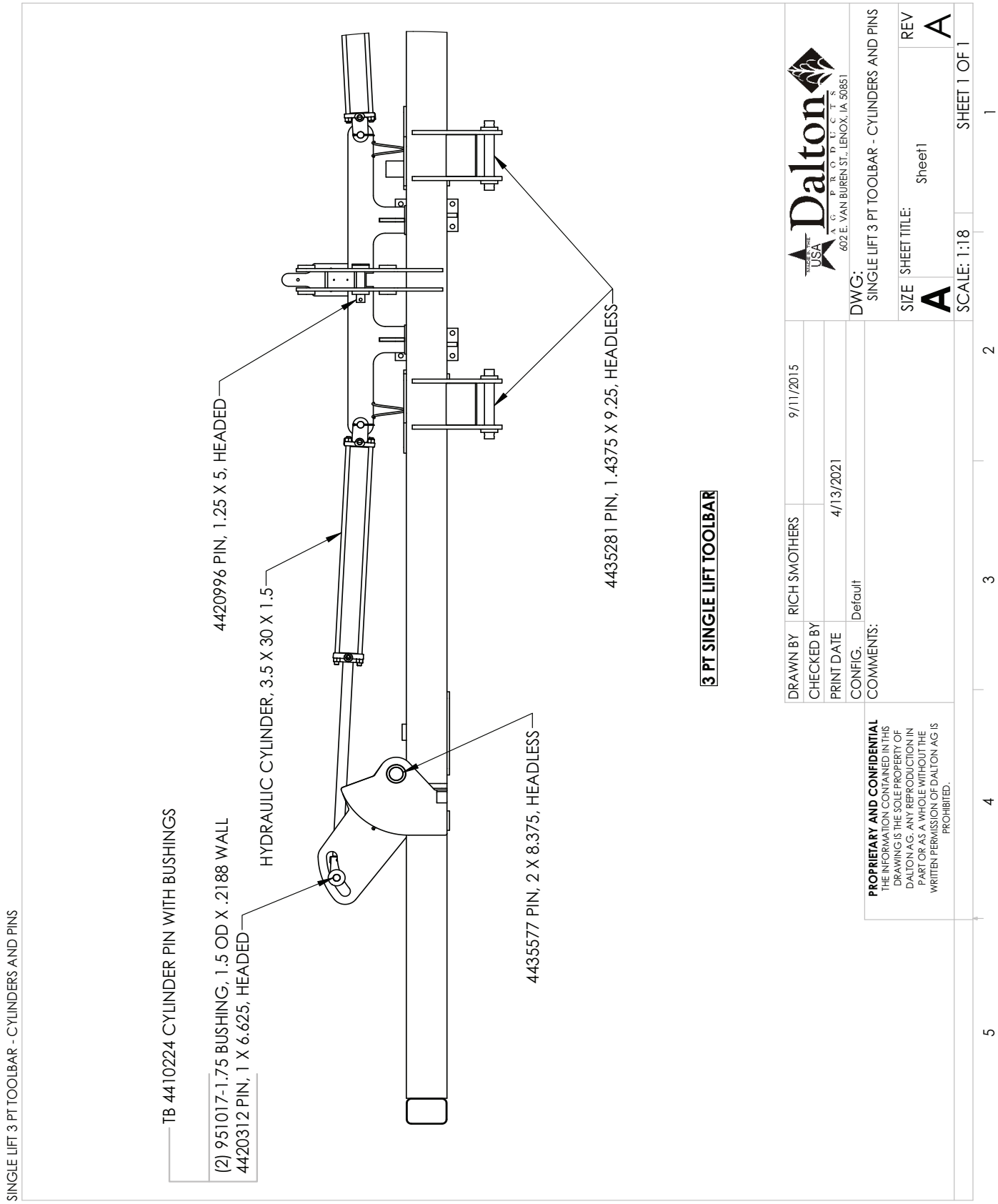

DOUBLE FOLD TOOLBAR - CYLINDERS & PINS

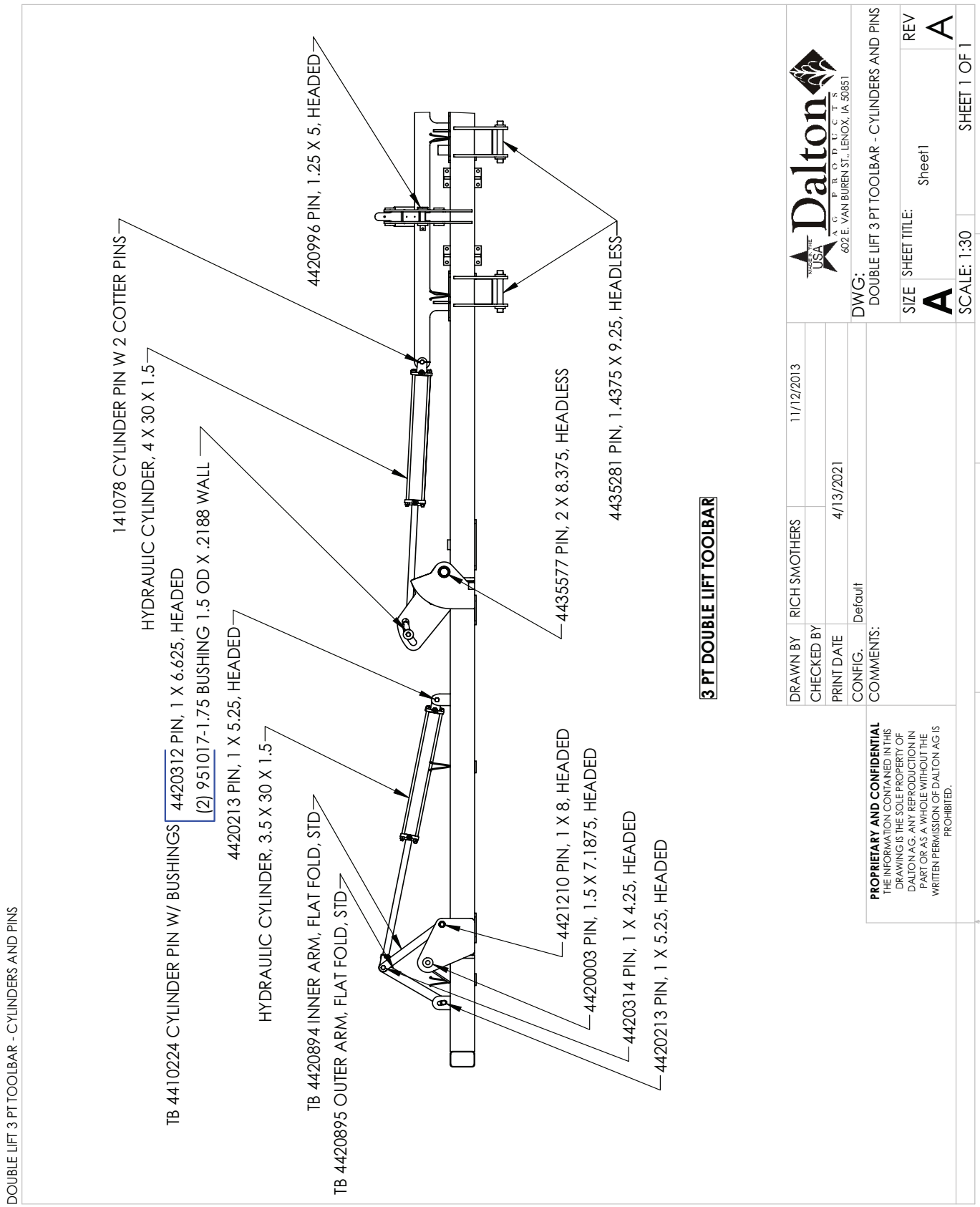

FRONT FOLD TOOLBAR - CYLINDERS & PINS

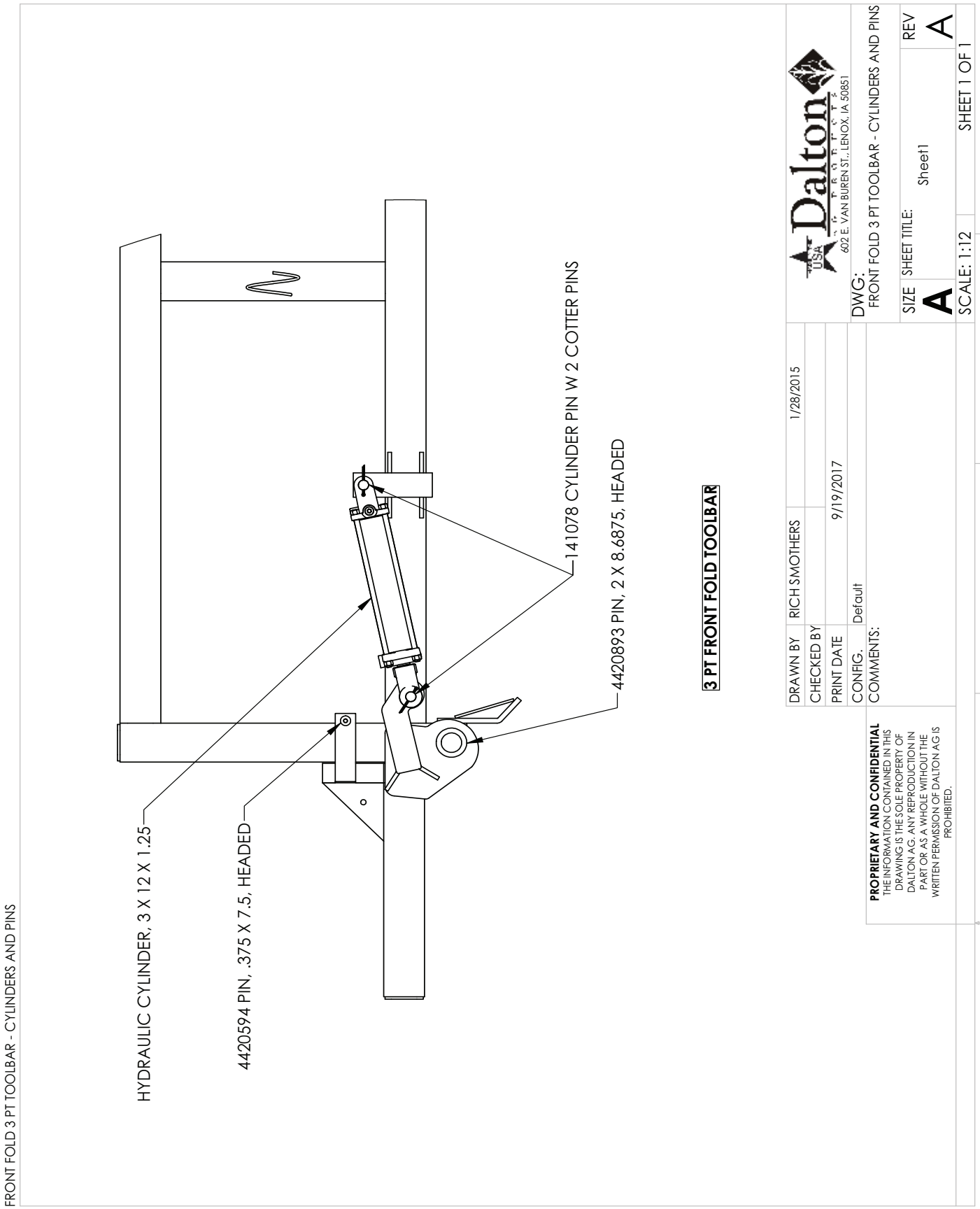

WING LOCK OPTIONS

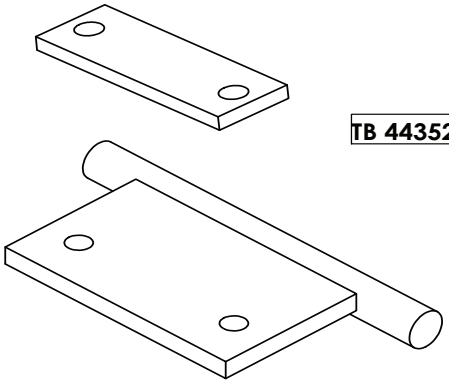

TB 4435227 BOLT PLATE, WING LOCK HOOK

TB 4420425 WING LOCK HOOK, WELDMENT

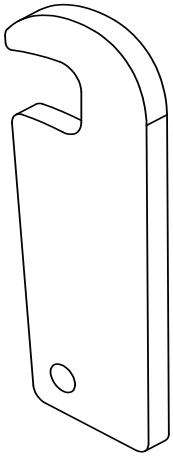

4435426 WING LATCH
(OR)
4420945 WING LATCH
(USE WITH OFFSET BASE)

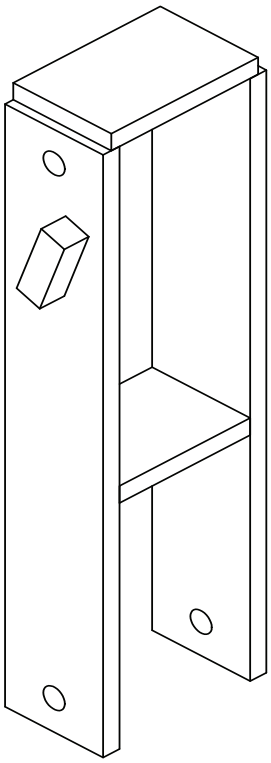

TB 4420369 WING LOCK BASE, WELDMENT
(OR)
4420943 TB WING LOCK, 4X6, OFFSET BASE

DRAWN BY	RICH SMOTHERS	1/25/2012	
CHECKED BY			
PRINT DATE	6/21/2016		
CONFIG.	Default		
COMMENTS:			

Dalton USA Ag Products
www.DaltonAg.com

DWG: 3 PT TOOLBAR WING LOCK

SIZE A | SHEET TITLE: Sheet1 | REV A

SCALE: 1:4 | SHEET 1 OF 1

PROPRIETARY AND CONFIDENTIAL
THE INFORMATION CONTAINED IN THIS DRAWING IS THE SOLE PROPERTY OF DALTON AG. ANY REPRODUCTION IN PART OR AS A WHOLE WITHOUT THE WRITTEN PERMISSION OF DALTON AG IS PROHIBITED.

TOOLBAR LIGHT KIT

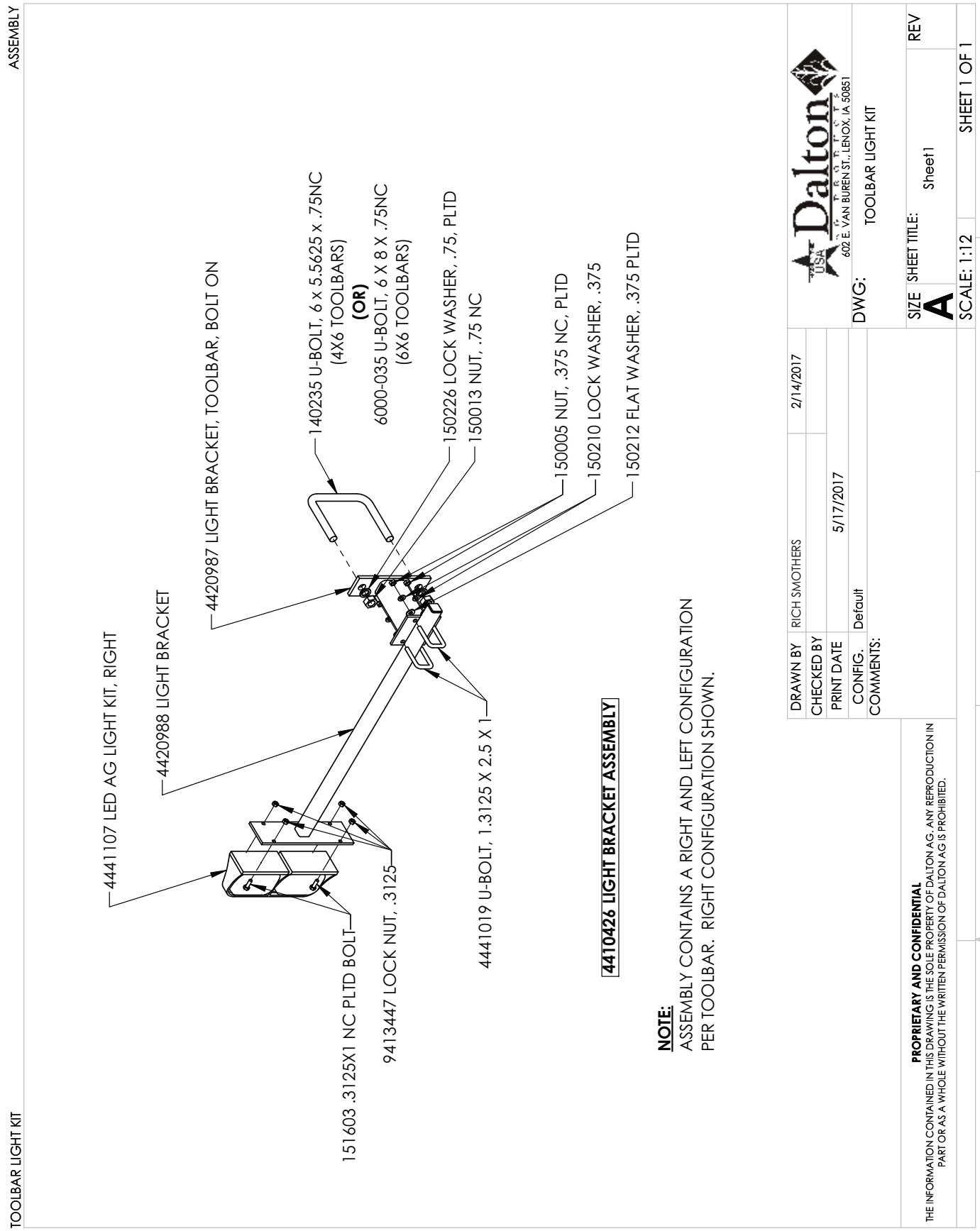

PARKING STAND

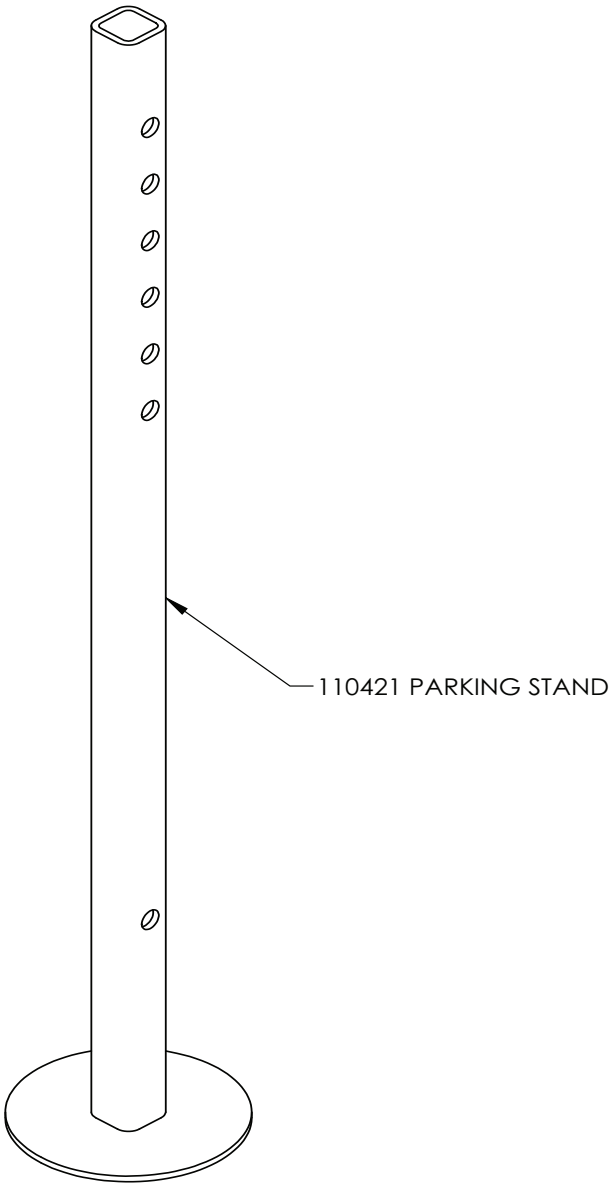

DRAWN BY	RICH SMOTHERS	1/5/2015	
CHECKED BY			
PRINT DATE	5/19/2017		
CONFIG.	Default		
COMMENTS:			

Dalton AG PRODUCTS
www.DaltonAg.com

DWG: 3 PT PARKING STAND

SIZE A | SHEET TITLE: Sheet1 | REV A

SCALE: 1:6 | SHEET 1 OF 1

PROPRIETARY AND CONFIDENTIAL
THE INFORMATION CONTAINED IN THIS DRAWING IS THE SOLE PROPERTY OF DALTON AG. ANY REPRODUCTION IN PART OR AS A WHOLE WITHOUT THE WRITTEN PERMISSION OF DALTON AG IS PROHIBITED.

REAR HITCH, HD

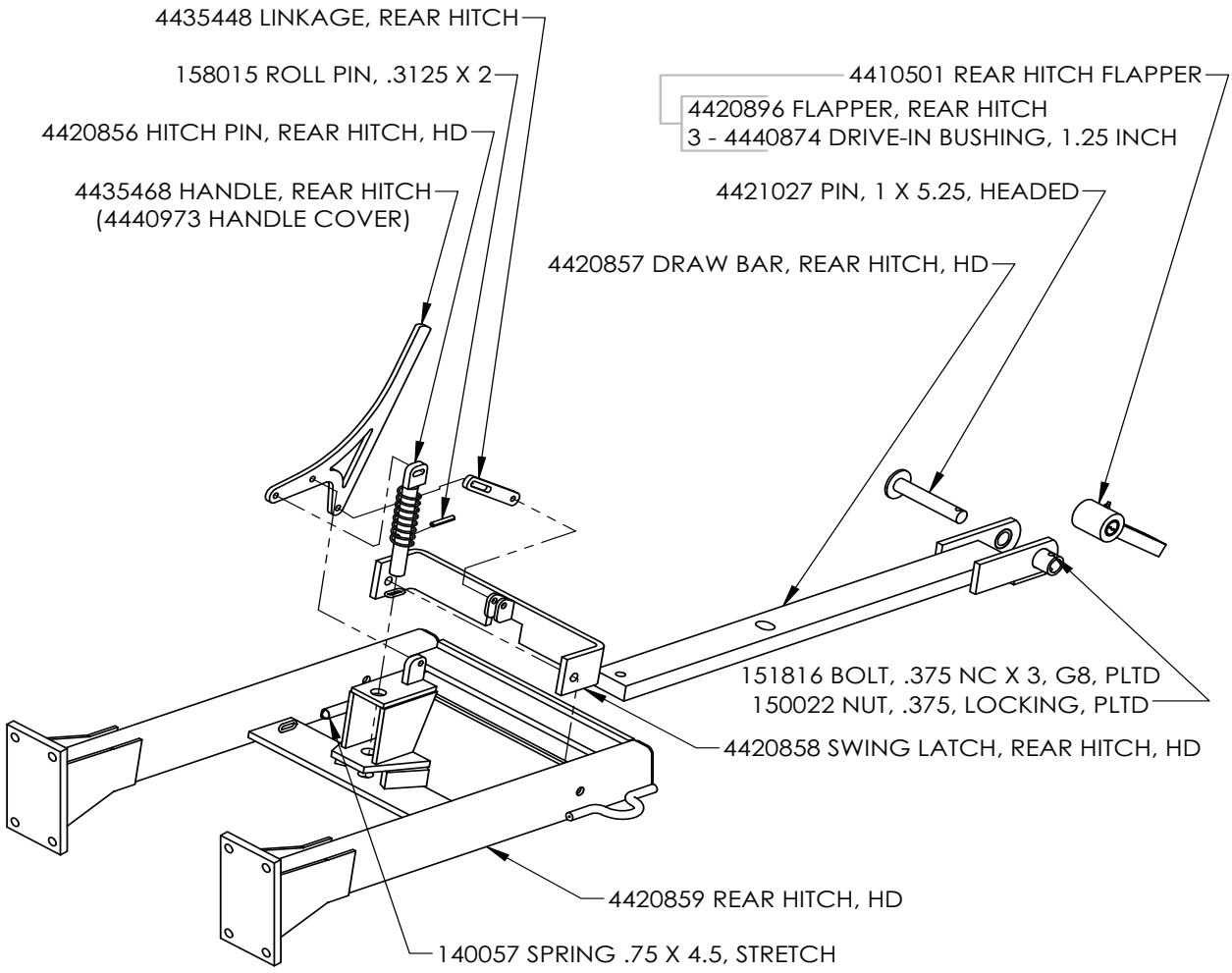

4410368 REAR HITCH, HD

DRAWN BY	RICH SMOTHERS	7/17/2008	
CHECKED BY			
PRINT DATE	9/18/2017		
CONFIG.	NO HARDWARE		
COMMENTS:			

Dalton USA AG PRODUCTS
www.DaltonAg.com

DWG: REAR HITCH, HD

SIZE A | SHEET TITLE: Sheet1 | REV A

SCALE: 1:12 | SHEET 1 OF 1

PROPRIETARY AND CONFIDENTIAL
THE INFORMATION CONTAINED IN THIS DRAWING IS THE SOLE PROPERTY OF DALTON AG. ANY REPRODUCTION IN PART OR AS A WHOLE WITHOUT THE WRITTEN PERMISSION OF DALTON AG IS PROHIBITED.

QUICK COUPLER SWIVEL MOUNT

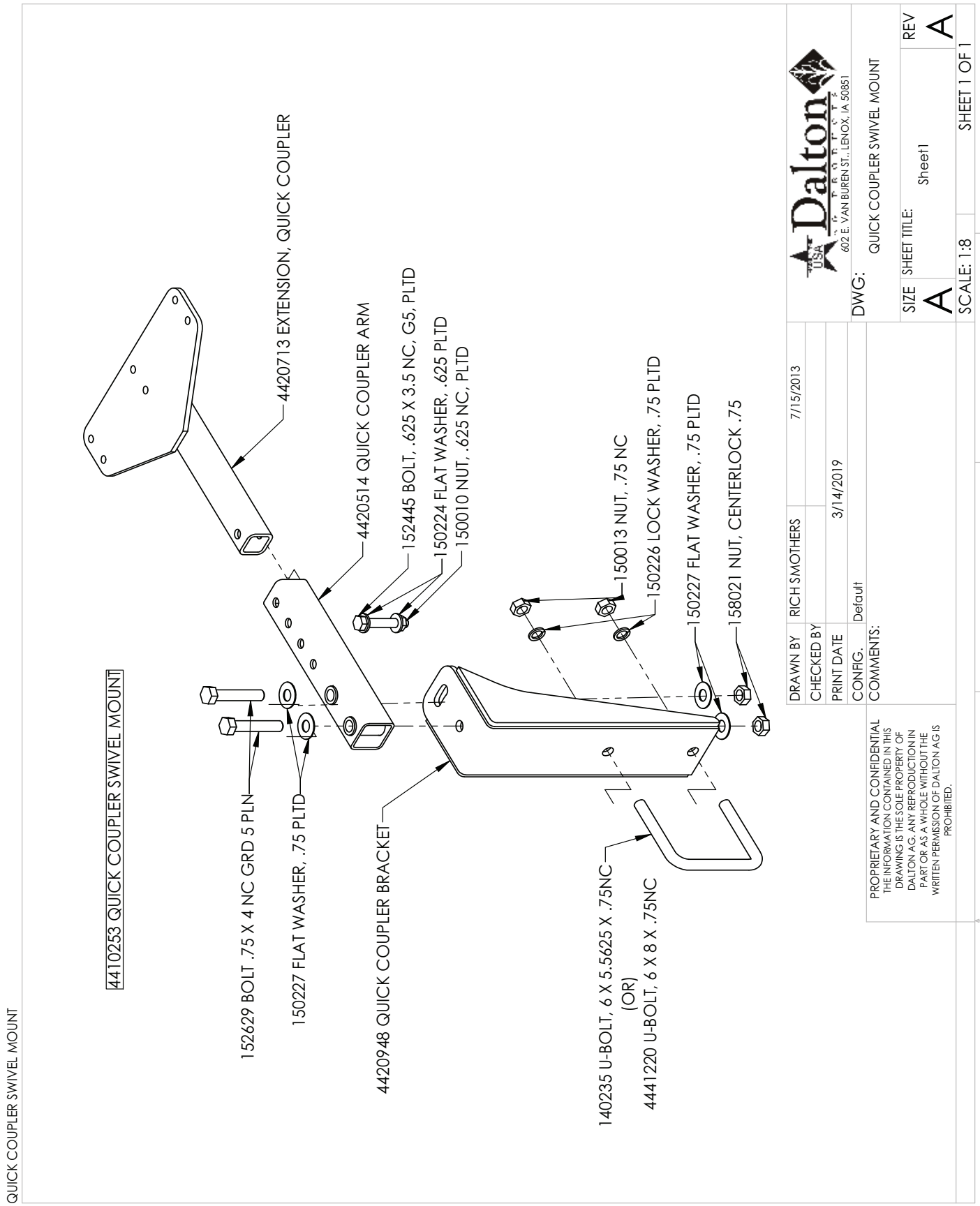

PIN TYPE GAUGE WHEEL

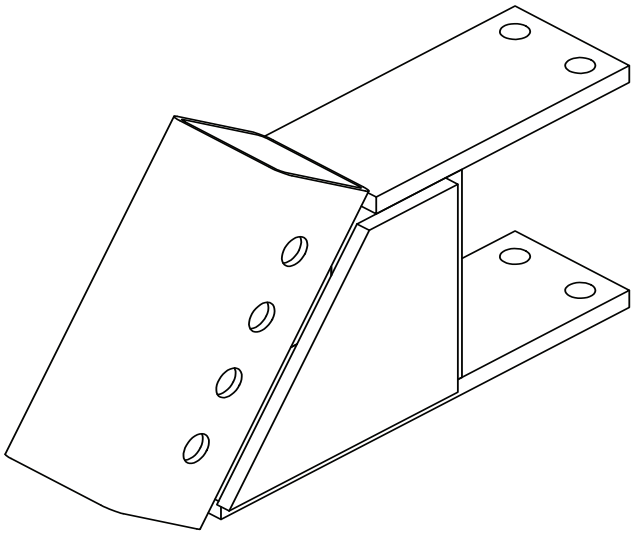

4420589 2 PIN GAUGE WHEEL BRACKET

Hardware:
2 - PULL RING PIN, .75 x 4.5

2 - 152422 BOLT, .625 NC x 8, G5
2 - 150222 LOCK WASHER, .625, PLTD
2 - 150010 NUT, .625 NC, PLTD

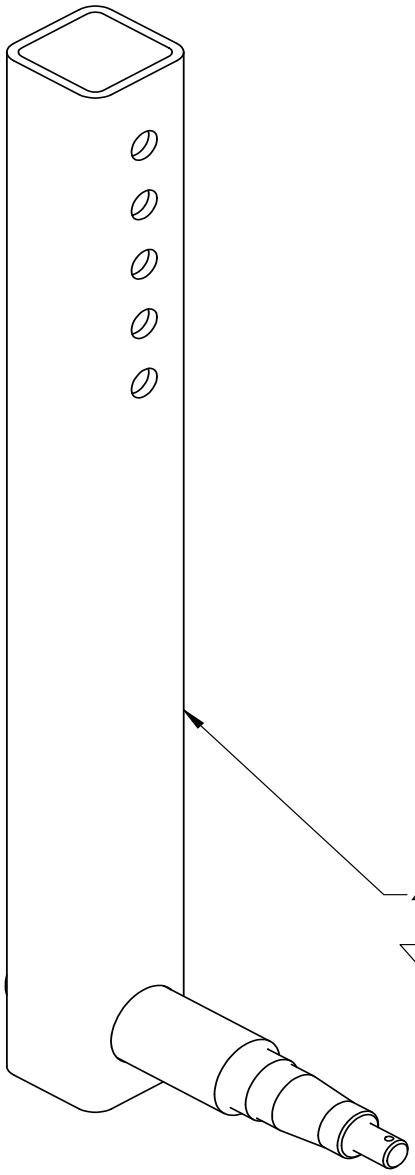

4410271 2 PIN GAUGE WHEEL

4420032 INNER TUBE WELDMENT, 2 PIN GAUGE WHEEL

4410086 888 6-BOLT HUB ASSEMBLY, COMPLETE

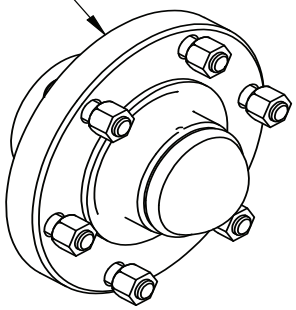

Optional:
110118 WHEEL, 15 x 8 x 6 BOLT
640461 TIRE, 11L x 15 x 8 PLY

DRAWN BY	RICH SMOTHERS	1/21/2014	
CHECKED BY			
PRINT DATE	6/21/2016		
CONFIG.	Default		
COMMENTS:			

Dalton AG PRODUCTS
www.DaltonAg.com

DWG: 2 PIN GAUGE WHEEL AND BRACKET

SIZE A | SHEET TITLE: Sheet1 | REV A

SCALE: 1:4 | SHEET 1 OF 1

PROPRIETARY AND CONFIDENTIAL
THE INFORMATION CONTAINED IN THIS DRAWING IS THE SOLE PROPERTY OF DALTON AG. ANY REPRODUCTION IN PART OR AS A WHOLE WITHOUT THE WRITTEN PERMISSION OF DALTON AG IS PROHIBITED.

4410086, 888 6-BOLT HUB ASSEMBLY

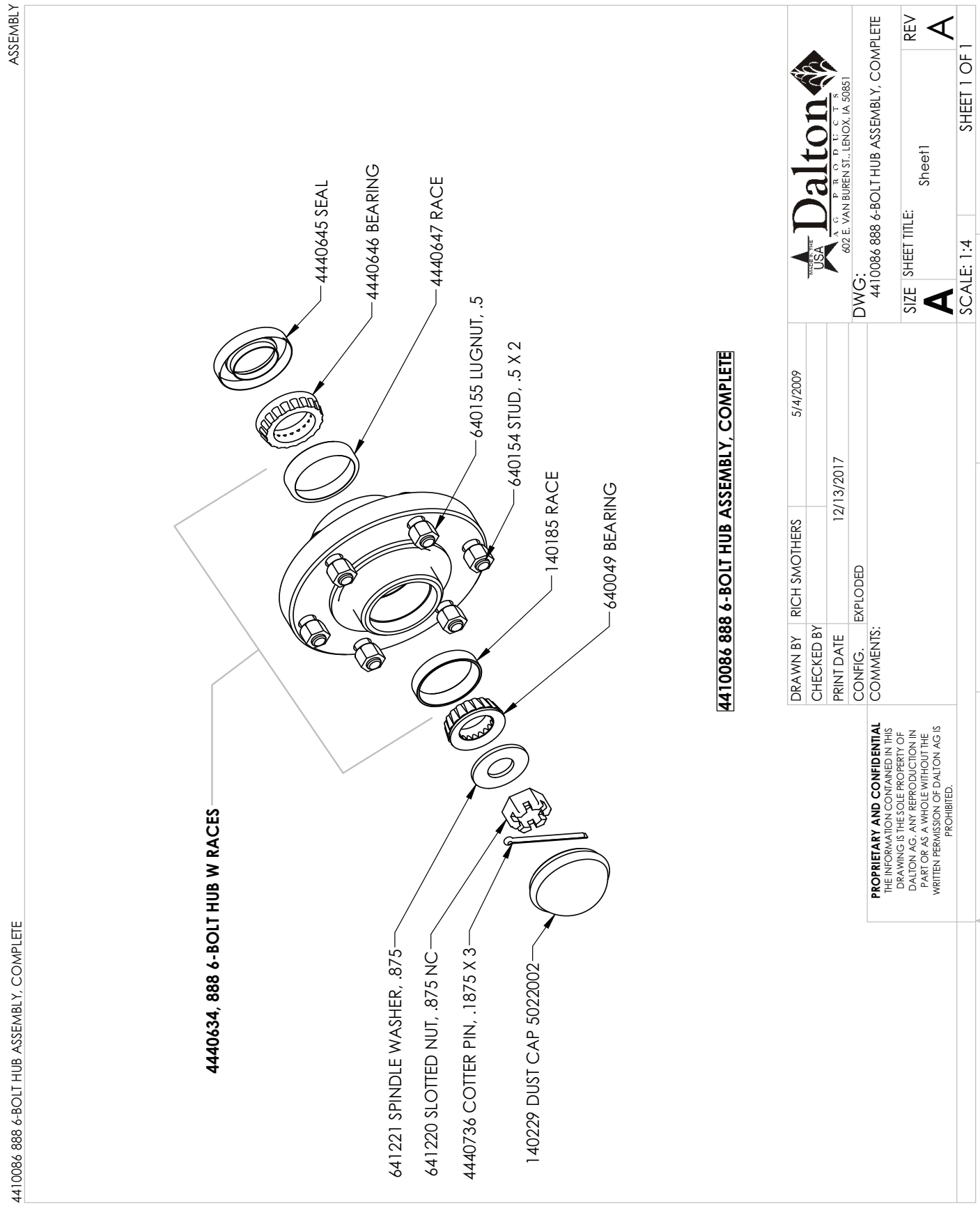

INLINE TRANSPORT

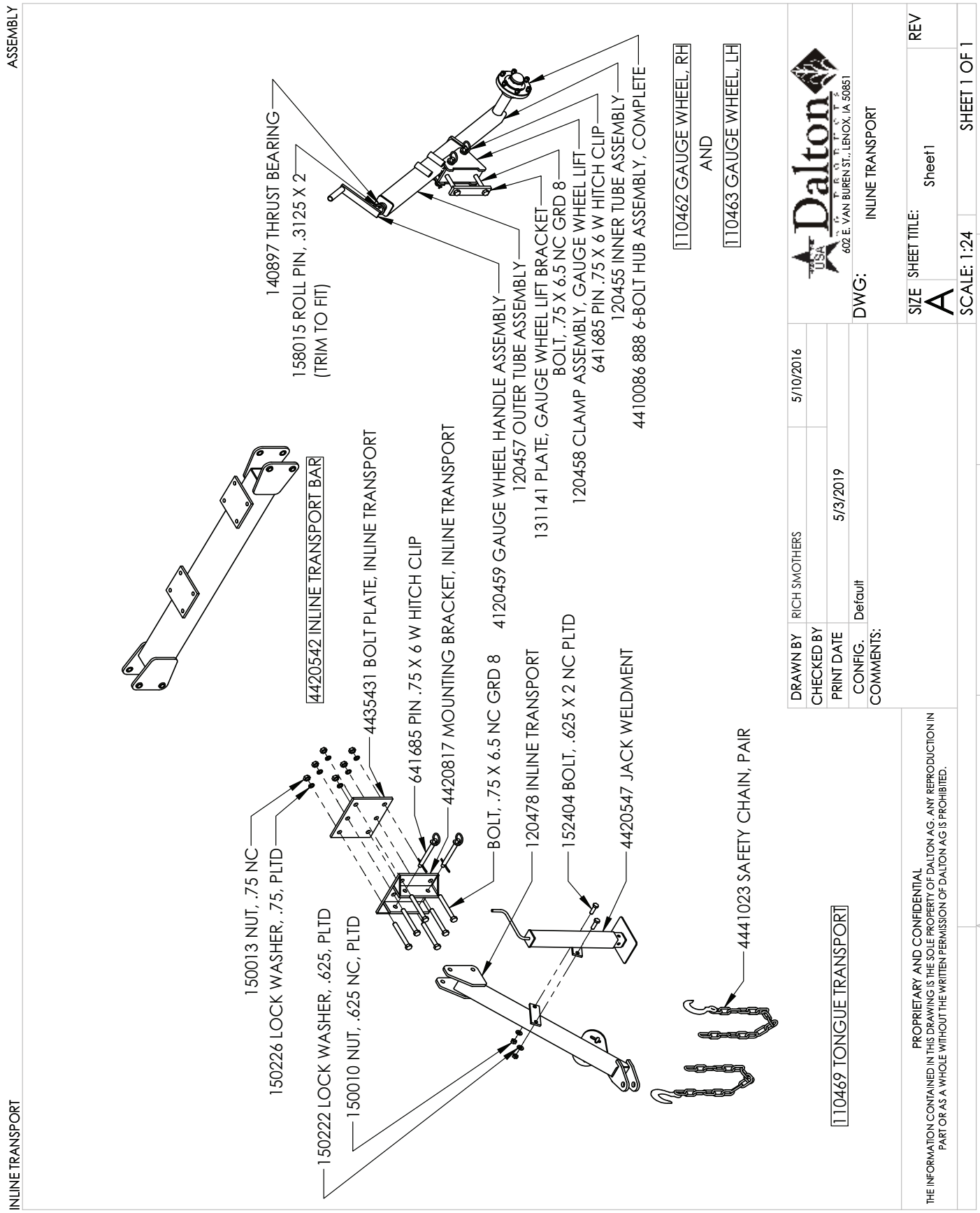

110462, GAUGE WHEEL

#	PART NUMBER	QTY.
1	120458 CLAMP ASSEMBLY, GAUGE WHEEL LIFT	1
2	120457 OUTER TUBE ASSEMBLY	1
3	140897 THRUST BEARING	1
4	158015 ROLL PIN, .3125 x 2	2
5	131141 PLATE, GAUGE WHEEL LIFT BRACKET	1
6	151222 GREASE ZERK, .25 SELF TAPPING	2
7	641685 PIN .75 x 6 W HITCH CLIP	2
8	4410086 888 6-BOLT HUB ASSEMBLY, COMPLETE	1
9	120455 INNER TUBE ASSEMBLY	1
10	HUB Q888	1
11	4440647 RACE	1
12	140185 RACE	1
13	4440646 BEARING	1
14	640049 BEARING	1
15	4440645 SEAL	1
16	641221 SPINDLE WASHER, .875	1
17	641220 SLOTTED NUT, .875 NC	1
18	140229 DUST CAP 5022002	1
19	4440736 COTTER PIN, .1875 x 3	1
20	120456 SCREW ROD ASSEMBLY	1
21	120459 GAUGE WHEEL HANDLE ASSEMBLY	1
22	152631 BOLT, .75 x 6.5 NC, G8	2
23	150226 LOCK WASHER, .75 PLTD	2
24	150012 NUT, .75 HH NC PLN	2

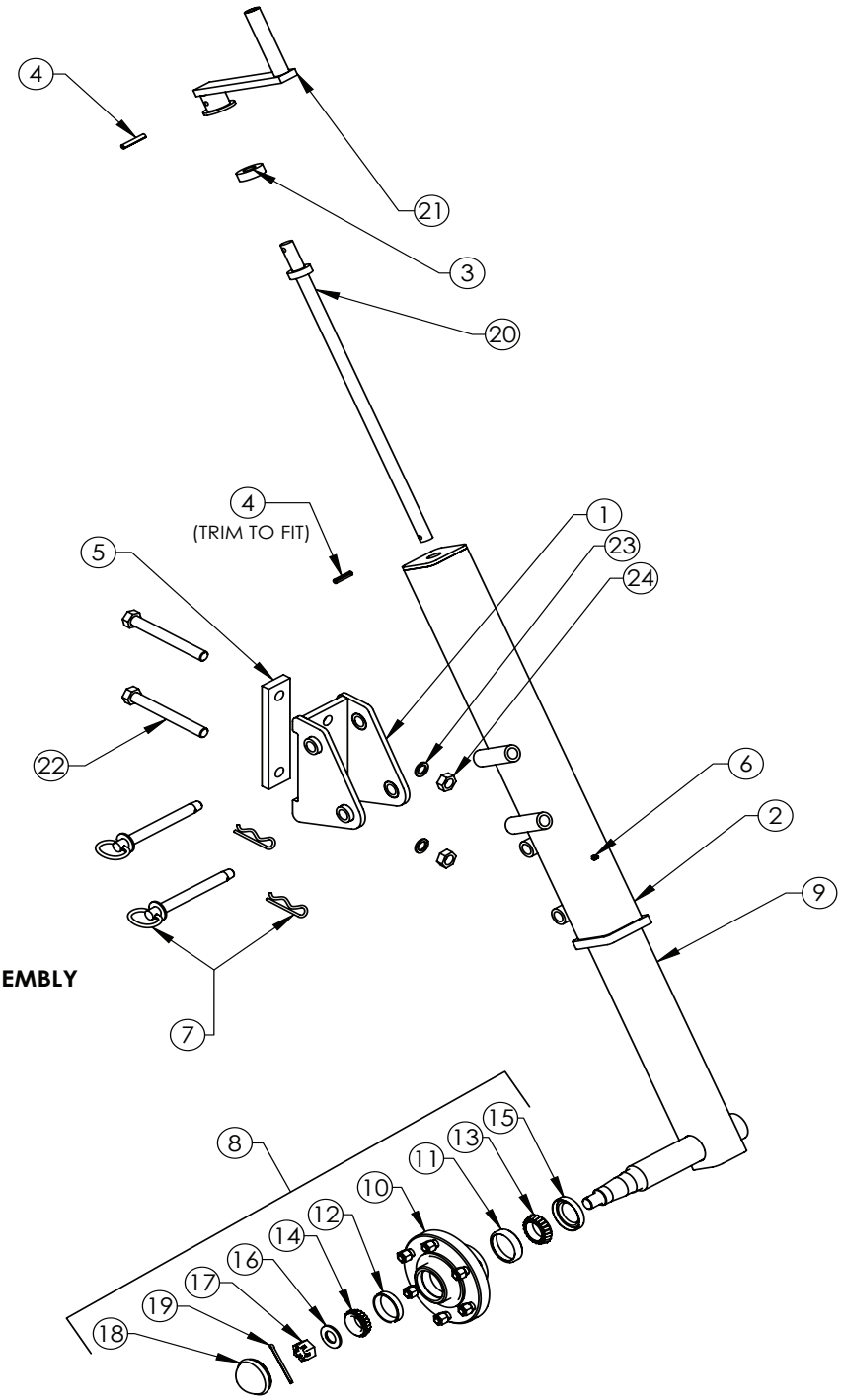

ASSEMBLY FOR 110463 GAUGE WHEEL, LH IS THE SAME, EXCEPT, 120455 INNER TUBE ASSEMBLY IS FACING THE OPPOSITE DIRECTION.

640155 LUGNUT, .5

DRAWN BY	RICH SMOTHERS	11/7/2013
CHECKED BY		
PRINT DATE	2/2/2022	
CONFIG.	EXPLODED VIEW	

Dalton AG PRODUCTS MADE IN THE USA
www.DaltonAg.com

PROPRIETARY AND CONFIDENTIAL
THE INFORMATION CONTAINED IN THIS DRAWING IS THE SOLE PROPERTY OF DALTON AG. ANY REPRODUCTION IN PART OR AS A WHOLE WITHOUT THE WRITTEN PERMISSION OF DALTON AG IS PROHIBITED.

COMMENTS:

DWG: 110462 GAUGE WHEEL, RH CUSTOMER

SIZE A | SHEET TITLE: Sheet1 | REV A

SCALE: 1:12 | SHEET 1 OF 1

4410171, STANDARD DISC SEALER

INDEPENDENT STYLE

#	PART NUMBER	QTY.
1	4410171 INDEPENDENT STYLE △	1
2	4410174 UPPER MOUNTING BRACKET □	1
3	DS 4420271 SHANK MOUNTING BRACKET	1
4	DS 4410256 PIVOT ARM W BUSHING, LH	1
5	4440857 BUSHING, COMPOSITE	2
6	DS 4410255 PIVOT ARM W BUSHING, RH	1
7	150251 FLAT WASHER, 1.25 ID x 1.875 OD	2
8	101689 SPRING PIN .375x2	2
9	4420277 HUB ASSEMBLY, STD □	2
10	DS 4420273 HUB BRACKET, STD, WELDMENT	1
11	DS 4420201 SPINDLE HUB, STD, WELDMENT	1
12	151222 GREASE ZERK, .25 SELF TAPPING	1
13	4440704 SEAL	1
14	4440702 BEARING	2
15	4440703 RACE	2
16	150224 FLAT WASHER, .625	1
17	4440737 SLOTTED NUT,	1
18	150406 COTTER PIN, .125 x 2	1
19	QDS909923 DUST CAP, 1.75	1
20	151835 CARRIAGE BOLT .375x.75 NC PLTD	8
21	DS 4440785 BLADE, 18 INCH NOTCHED	2
22	158005 FLANGE NUT, .375 NC	8
23	158006 FLANGE BOLT, .5 NC x 1.75, G5	4
24	158007 FLANGE NUT, .5 NC	8
25	4440788 U-BOLT, 2 x 2.5 x .5 NC, SQUARE HEAD	2

ALL QUANTITIES ARE PER ROW UNIT

4450048 - STANDARD DISC SEALER REBUILD KIT
-INCLUDES (2) BEARINGS, (2) RACES, AND (1) SEAL

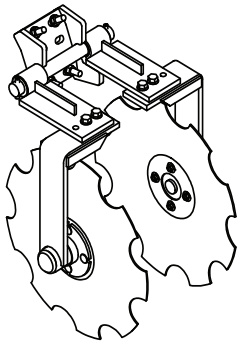

4410171 INDEPENDENT STYLE

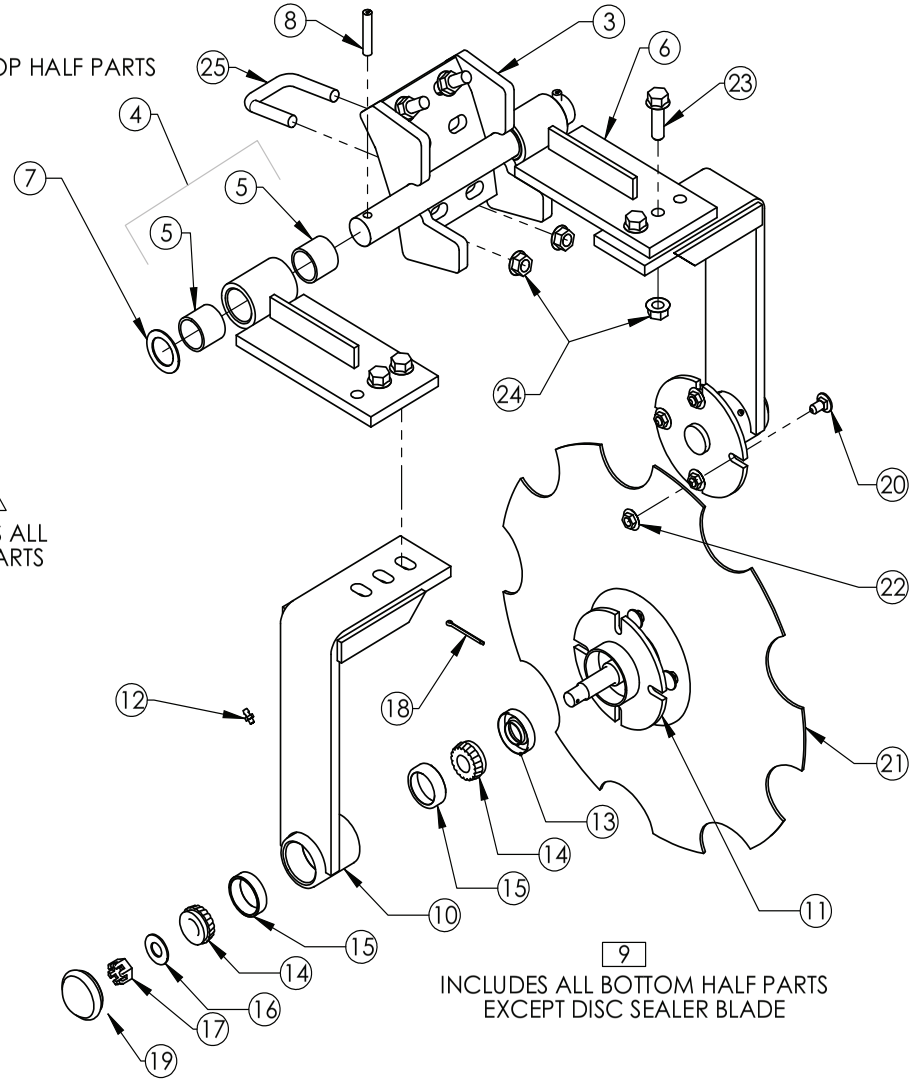

PROPRIETARY AND CONFIDENTIAL
THE INFORMATION CONTAINED IN THIS DRAWING IS THE SOLE PROPERTY OF DALTON AG. ANY REPRODUCTION IN PART OR AS A WHOLE WITHOUT THE WRITTEN PERMISSION OF DALTON AG IS PROHIBITED.

DRAWN BY	RICH SMOTHERS	10/21/2013
CHECKED BY		
PRINT DATE	6/28/2016	
CONFIG.	EXP VIEW	
COMMENTS:	**4410171 INDEPENDENT STYLE**	

Dalton AG PRODUCTS USA
602 E. VAN BUREN ST., LENOX, IA 50851

DWG: INDEPENDENT STYLE

SIZE **A** | SHEET TITLE: B.O.M. | REV A

SCALE: 1:7 | SHEET 1 OF 1

5 4 3 2 1

4410171 OS, STANDARD DISC SEALER WITH OFFSET ARMS

OS INDEPENDENT STYLE WITH OFFSET ARMS

#	PART NUMBER	Q.
1	4410171 OS INDEPENDENT STYLE WITH OFFSET ARMS △	1
2	DS 4410174 OS UPPER MOUNTING BRACKET, OFFSET □	1
3	DS 4420271 SHANK MOUNTING BRACKET	1
4	DS 4410256 PIVOT ARM W BUSHING, LH	1
5	4440857 BUSHING, COMPOSITE	2
6	150251 FLAT WASHER, 1.25 ID x 1.875 OD	2
7	101689 SPRING PIN .375x2	2
8	DS 4410303 PIVOT ARM, LONG, RH	1
9	4420277 HUB ASSEMBLY, STD □	2
10	DS 4420273 HUB BRACKET, STD, WELDMENT	1
11	DS 4420201 SPINDLE HUB, STD, WELDMENT	1
12	151222 GREASE ZERK, .25 SELF TAPPING	1
13	4440704 SEAL	1
14	4440702 BEARING	2
15	4440703 RACE	2
16	150224 FLAT WASHER, .625	1
17	4440737 SLOTTED NUT,	1
18	150406 COTTER PIN, .125 x 2	1
19	QDS909923 DUST CAP, 1.75	1
20	151835 CARRIAGE BOLT .375x.75 NC PLTD	8
21	DS 4440785 BLADE, 18 INCH NOTCHED	2
16	158005 FLANGE NUT, .375 NC	8
23	158006 FLANGE BOLT, .5 NC x 1.75, G5	4
24	158007 FLANGE NUT, .5 NC	8
25	4440788 U-BOLT, 2 x 2.5 x .5 NC, SQUARE HEAD	2

ALL QUANTITIES ARE PER ROW UNIT

**** TO REVERSE OFFSET ****
USE 4410304 PIVOT ARM, LONG, LH AND
4410255 PIVOT ARM w BUSHING, RH

4450048 - STANDARD DISC SEALER REBUILD KIT
-INCLUDES (2) BEARINGS, (2) RACES, AND (1) SEAL

4410171 OS INDEPENDENT STYLE WITH OFFSET ARMS

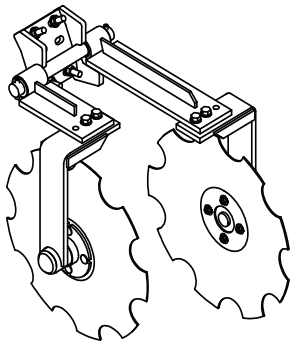

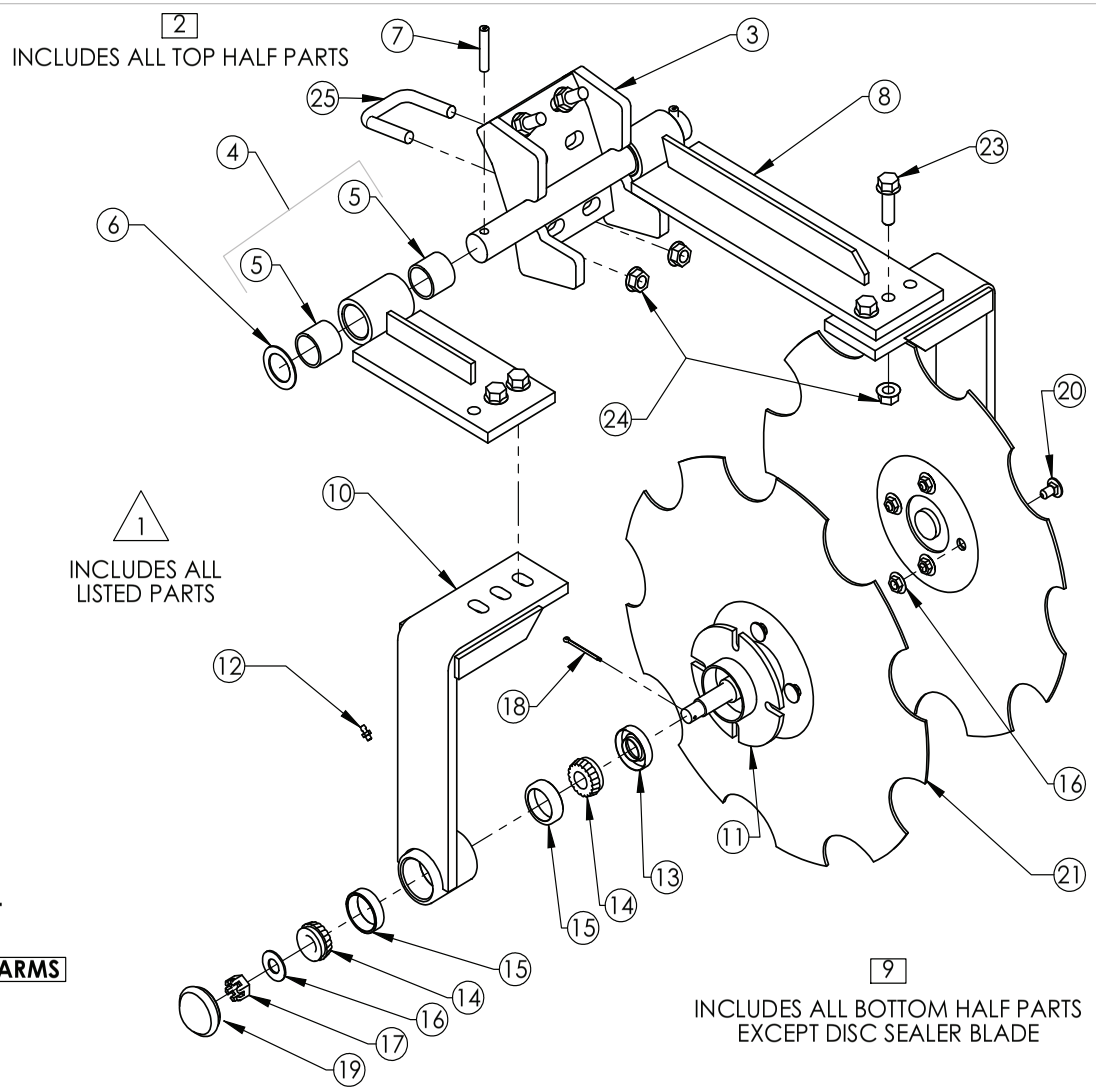

PROPRIETARY AND CONFIDENTIAL
THE INFORMATION CONTAINED IN THIS DRAWING IS THE SOLE PROPERTY OF DALTON AG. ANY REPRODUCTION IN PART OR AS A WHOLE WITHOUT THE WRITTEN PERMISSION OF DALTON AG IS PROHIBITED.

DRAWN BY	RICH SMOTHERS	10/21/2013
CHECKED BY		
PRINT DATE	6/28/2016	
CONFIG.	EXP VIEW	
COMMENTS:	**4410171 OS INDEPENDENT STYLE WITH OFFSET ARMS**	

Dalton AG PRODUCTS USA
602 E. VAN BUREN ST., LENOX, IA 50851

DWG: OS INDEPENDENT STYLE WITH OFFSET ARMS

SIZE	SHEET TITLE:	REV
A	B.O.M.	A

SCALE: 1:7 | SHEET 1 OF 1

5 4 3 2 1

4410223, HEAVY DUTY DISC SEALER

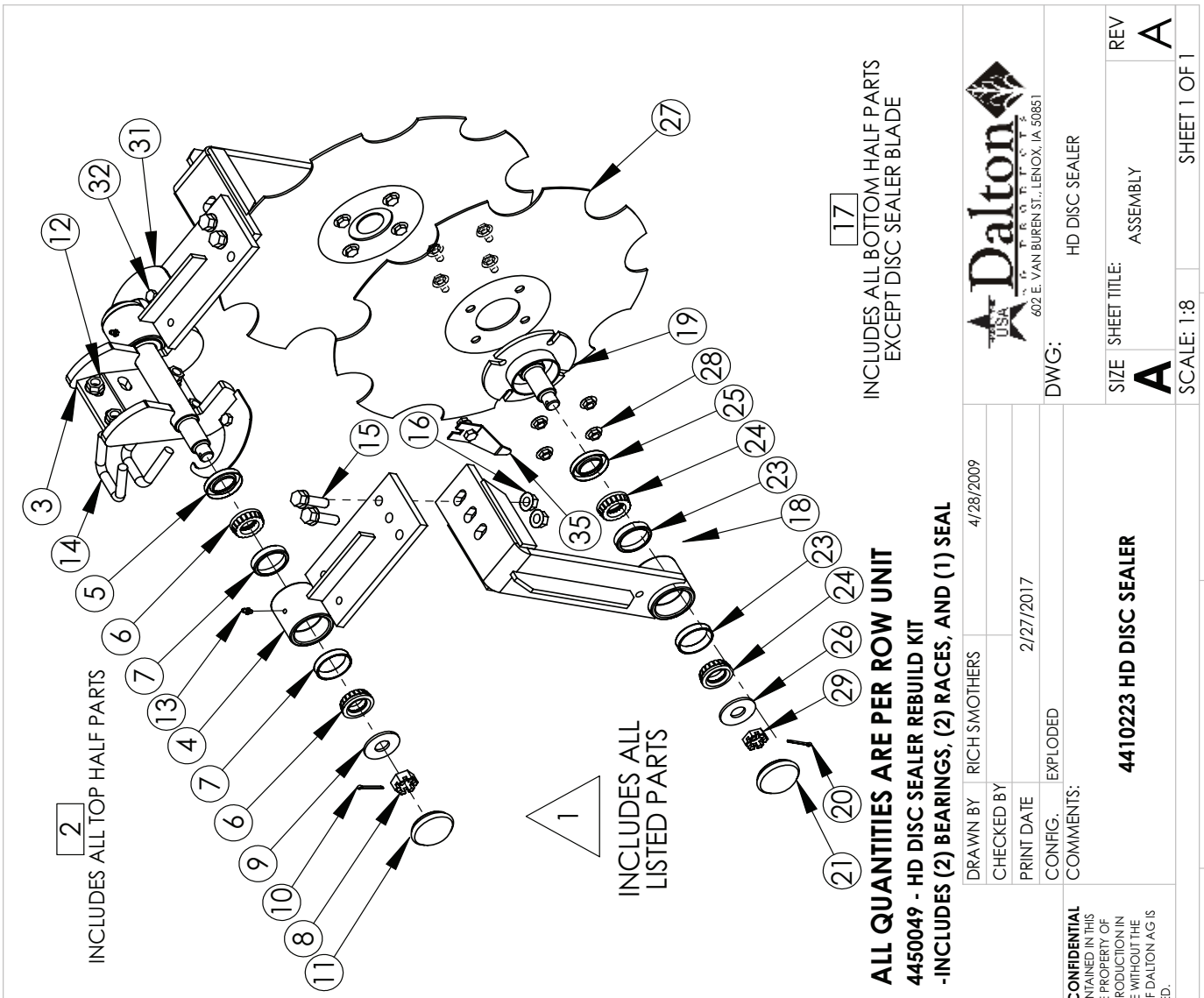

HD DISC SEALER

#	PART NUMBER	Q
1	4410223 HD DISC SEALER △	1
2	4420310 HD UPPER MOUNTING ASSEMBLY □	1
3	DS 4420302 UPPER MOUNTING BRACKET, HD, WELDMENT	1
4	DS 4420303 PIVOT ARM, HD	2
5	4440815 SEAL	2
6	4440816 BEARING	4
7	4440817 RACE	4
8	158003 SLOTTED NUT, .75 NC	2
9	158012 SPINDLE WASHER, SAE .75	2
10	150409 COTTER PIN, .125 x 1.5, PLAIN	2
11	4440814 DUST CAP, 2 INCH	2
12	158007 FLANGE NUT, .5 NC	4
13	151222 GREASE ZERK, .25 SELF TAPPING	2
14	4440788 U-BOLT, 2 x 2.5 x .5 NC, SQUARE HEAD	2
15	158006 FLANGE BOLT, .5 NC x 1.75, G5	4
16	158007 FLANGE NUT, .5 NC	4
17	4420309 HD HUB ASSEMBLY □	1
18	DS 4420304 HUB BRACKET, WELDMENT, HD	1
19	DS 4420305 SPINDLE HUB, HD, WELDMENT	1
20	150409 COTTER PIN, .125 x 1.5, PLAIN	1
21	4440814 DUST CAP, 2 INCH	1
22	151222 GREASE ZERK, .25 SELF TAPPING	1
23	4440817 RACE	2
24	4440816 BEARING	2
25	4440815 SEAL	1
26	158012 SPINDLE WASHER, SAE .75	1
27	DS 4440785 BLADE, 18 INCH NOTCHED	1
28	158005 FLANGE NUT, .375 NC	4
29	158002 SLOTTED NUT, .75 NC THIN	1
30	158004 FLANGE BOLT, .375 NC x .75, G5	4
31	4435859 HD CAP RETAINER	2
32	151802 BOLT, .375 NC x 1, PLTD	4
33	150210 LOCK WASHER, .375	4
34	150005 NUT, .375 NC, PLTD	4
35	4435850 RETAINER, DUST CAP	2

4410223 OS, HEAVY DUTY DISC SEALER WITH OFFSET ARMS

OS HD DISC SEALER WITH OFFSET ARMS

#	PART NUMBER	Q
1	4410223 OS HD DISC SEALER WITH OFFSET ARMS △	1
2	4420310 OS HD UPPER MOUNTING ASSEMBLY □	1
3	DS 4420302 UPPER MOUNTING BRACKET, HD, WELDMENT	1
4	DS 4420303 PIVOT ARM, HD	1
5	4440815 SEAL	2
6	4440816 BEARING	4
7	4440817 RACE	4
8	158003 SLOTTED NUT, .75 NC	2
9	158012 SPINDLE WASHER, SAE .75	2
10	150409 COTTER PIN, .125 x 1.5, PLAIN	2
11	4440814 DUST CAP, 2 INCH	2
12	158007 FLANGE NUT, .5 NC	4
13	151222 GREASE ZERK, .25 SELF TAPPING	2
14	4440788 U-BOLT, 2 x 2.5 x .5 NC, SQUARE HEAD	2
15	4420581 PIVOT ARM, HD, LONG	1
16	158006 FLANGE BOLT, .5 NC x 1.75, G5	4
17	158007 FLANGE NUT, .5 NC	4
18	4420309 HD HUB ASSEMBLY □	2
19	DS 4420304 HUB BRACKET, WELDMENT, HD	1
20	DS 4420305 SPINDLE HUB, HD, WELDMENT	1
21	150409 COTTER PIN, .125 x 1.5, PLAIN	1
22	4440814 DUST CAP, 2 INCH	1
23	151222 GREASE ZERK, .25 SELF TAPPING	1
24	4440817 RACE	2
25	4440816 BEARING	2
26	4440815 SEAL	1
27	158012 SPINDLE WASHER, SAE .75	1
28	DS 4440785 BLADE, 18 INCH NOTCHED	1
29	158005 FLANGE NUT, .375 NC	4
30	158002 SLOTTED NUT, .75 NC THIN	1
31	158004 FLANGE BOLT, .375 NC x .75, G5	4
32	4435859 HD CAP RETAINER	2
33	151802 BOLT, .375 NC x 1, PLTD	4
34	150210 LOCK WASHER, .375	4
35	150005 NUT, .375 NC, PLTD	4
36	4435850 RETAINER, DUST CAP	2

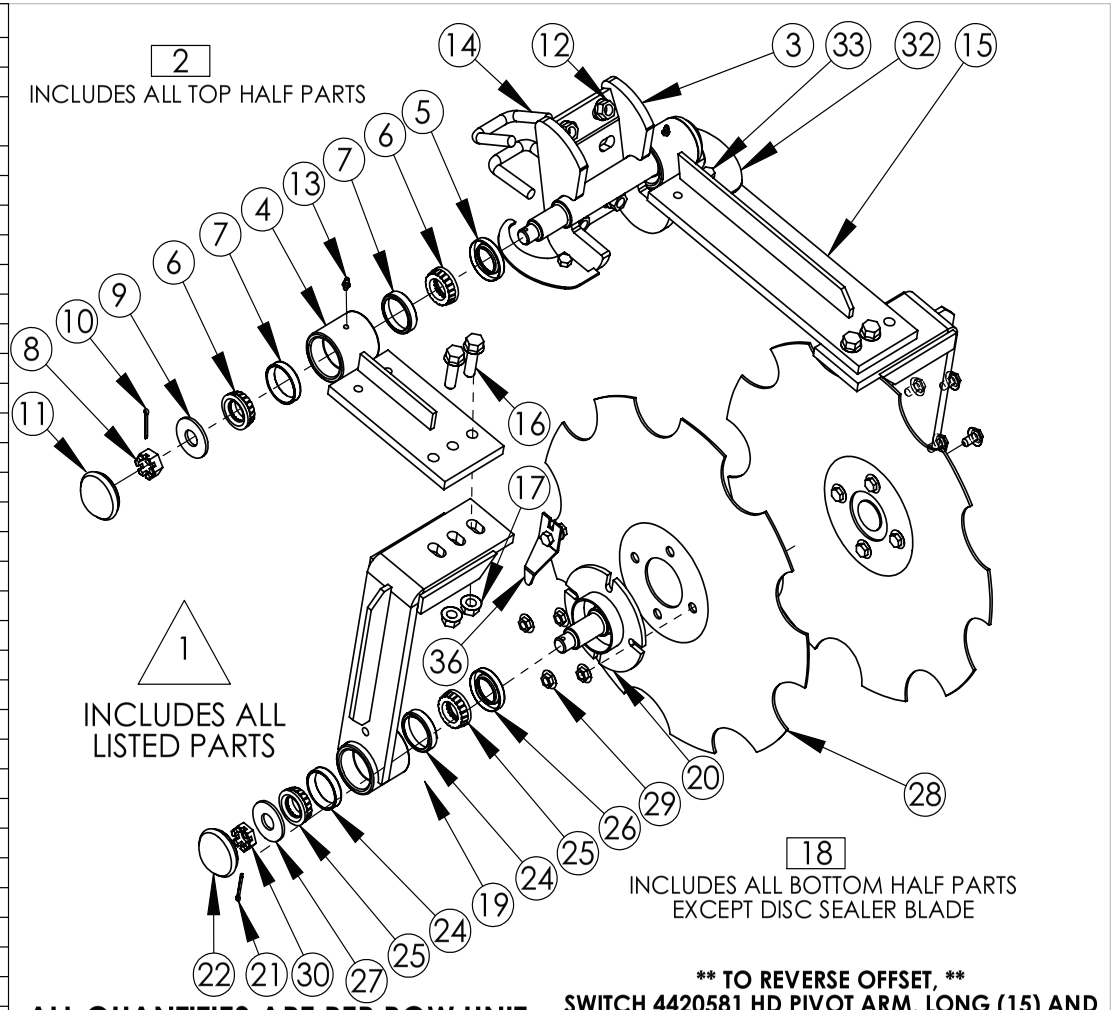

ALL QUANTITIES ARE PER ROW UNIT

4450049 - HD DISC SEALER REBUILD KIT

-INCLUDES (2) BEARINGS, (2) RACES, AND (1) SEAL

**** TO REVERSE OFFSET, ****
SWITCH 4420581 HD PIVOT ARM, LONG (15) AND 4420303 HD PIVOT ARM (4) TO OPPOSITE SIDES

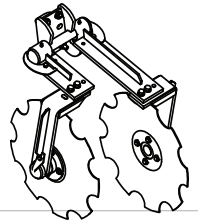

4410223 OS HD DISC SEALER WITH OFFSET ARMS

PROPRIETARY AND CONFIDENTIAL
THE INFORMATION CONTAINED IN THIS DRAWING IS THE SOLE PROPERTY OF DALTON AG. ANY REPRODUCTION IN PART OR AS A WHOLE WITHOUT THE WRITTEN PERMISSION OF DALTON AG IS PROHIBITED.

DRAWN BY	RICH SMOTHERS	4/28/2009
CHECKED BY		
PRINT DATE	2/27/2017	
CONFIG.	EXPLODED	
COMMENTS:	**4410223 OS HD DISC SEALER WITH OFFSET ARMS**	

Dalton USA AG PRODUCTS
602 E. VAN BUREN ST., LENOX, IA 50851

DWG: OS HD DISC SEALER WITH OFFSET ARMS

SIZE	SHEET TITLE:	REV
A	ASSEMBLY	A

SCALE: 1:8 | SHEET 1 OF 1

5 4 3 2 1

4410185, STANDARD SIDE DRESS DISC SEALER WITH 14.5 INCH ARMS

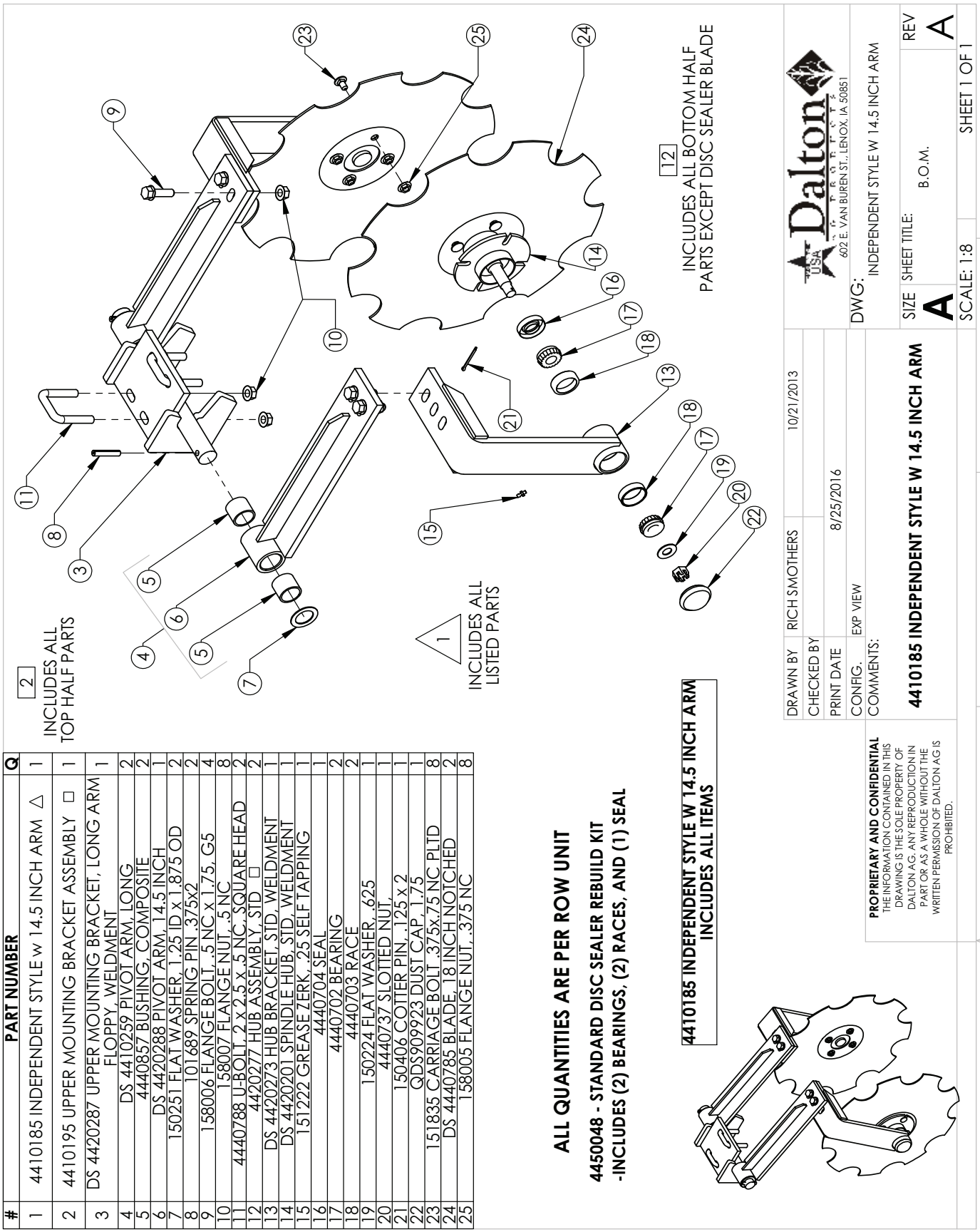

#	PART NUMBER	Q
1	4410185 INDEPENDENT STYLE w 14.5 INCH ARM △	1
2	4410195 UPPER MOUNTING BRACKET ASSEMBLY □	1
3	DS 4420287 UPPER MOUNTING BRACKET, LONG ARM FLOPPY, WELDMENT	1
4	DS 4410259 PIVOT ARM, LONG	2
5	4440857 BUSHING, COMPOSITE	2
6	DS 4420288 PIVOT ARM, 14.5 INCH	1
7	150251 FLAT WASHER, 1.25 ID x 1.875 OD	2
8	101689 SPRING PIN .375x2	2
9	158006 FLANGE BOLT, .5 NC x 1.75, G5	4
10	158007 FLANGE NUT, .5 NC	8
11	4440788 U-BOLT, 2 x 2.5 x .5 NC, SQUARE HEAD	2
12	4420277 HUB ASSEMBLY, STD □	2
13	DS 4420273 HUB BRACKET, STD, WELDMENT	1
14	DS 4420201 SPINDLE HUB, STD, WELDMENT	1
15	151222 GREASE ZERK, .25 SELF TAPPING	1
16	4440704 SEAL	1
17	4440702 BEARING	2
18	4440703 RACE	2
19	150224 FLAT WASHER, .625	1
20	4440737 SLOTTED NUT	1
21	150406 COTTER PIN, .125 x 2	1
22	QDS909923 DUST CAP, 1.75	1
23	151835 CARRIAGE BOLT .375x.75 NC PLTD	8
24	DS 4440785 BLADE, 18 INCH NOTCHED	2
25	158005 FLANGE NUT, .375 NC	8

HD DISC SEALER WITH 14.5 INCH ARM

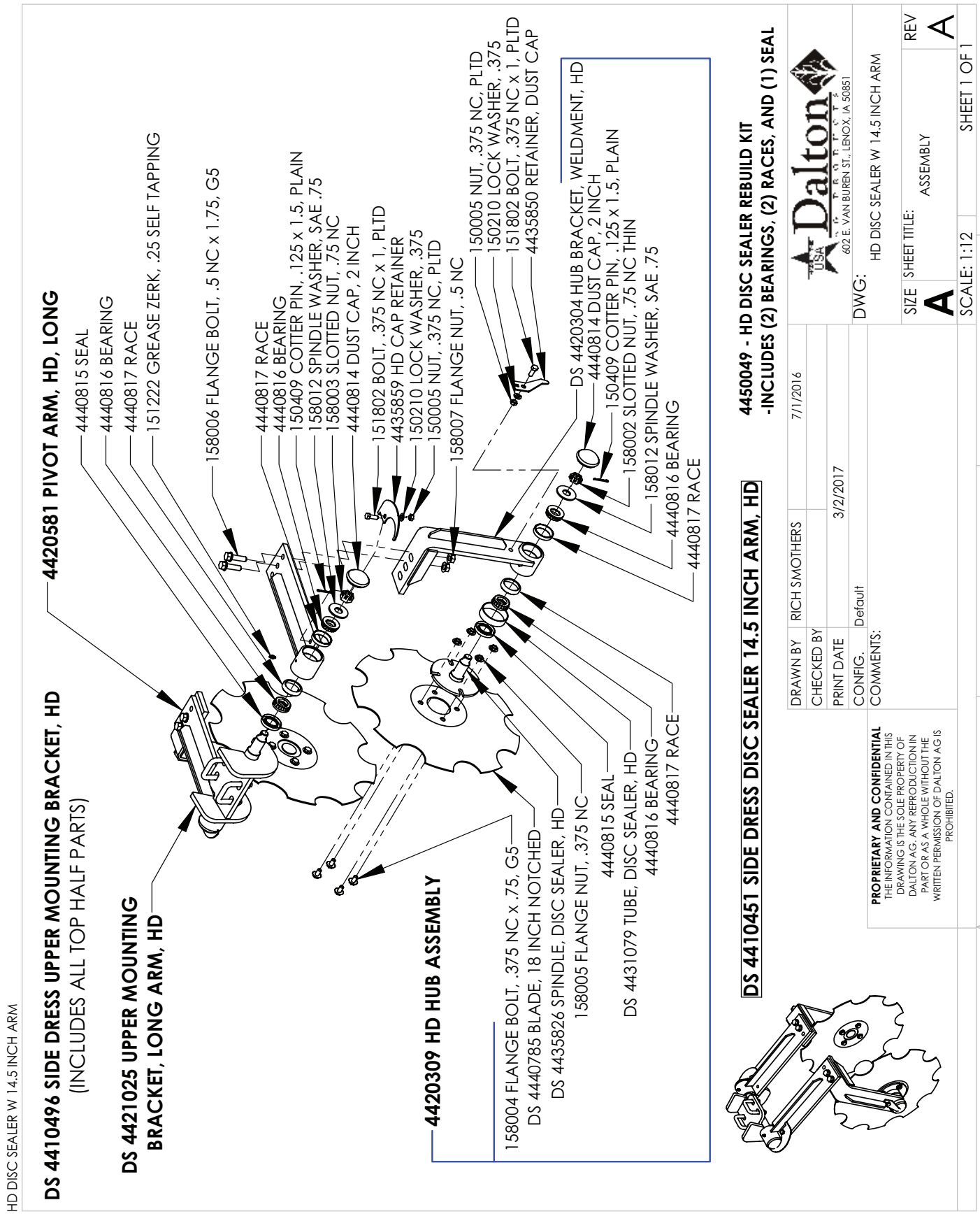

4410737, EDGE HEAVY DUTY DISC SEALER

4410737 EDGE HD DISC SEALER

REVISIONS			
REV	REV DESCRIPTION	REV DATE	APV'D
A	UPDATED BOM DISPLAY	3/5/21	JNJ

1

INCLUDES ALL TOP HALF PARTS

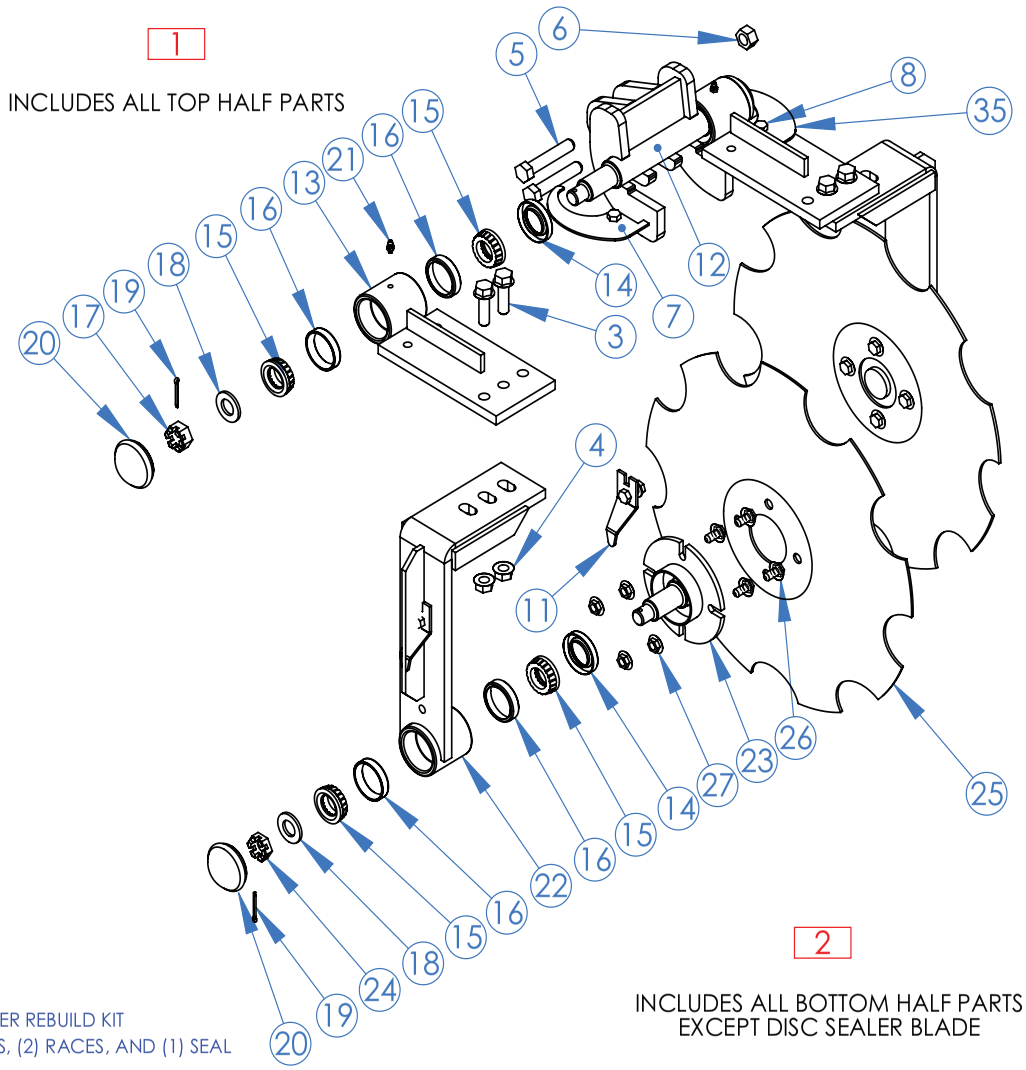

2

INCLUDES ALL BOTTOM HALF PARTS
EXCEPT DISC SEALER BLADE

#	PART NUMBER
1	4410738 EDGE HD UPPER MOUNT
2	4420309 HD HUB ASSEMBLY
3	158006 FLANGE BOLT, .5 x 1.75 NC, G5
4	158007 FLANGE NUT, .5 NC
5	158277 BOLT, .5625 x 3 NC GR 8
6	158073 NUT, .5625 NC, CENTERLOCK, PLTD
7	4435859 HD CAP RETAINER
8	151802 BOLT, .375 x 1 NC, PLTD
9	150210 LOCK WASHER, .375
10	150005 NUT, .375 NC, PLTD
11	4435850 RETAINER, DUST CAP
12	4421430 EDGE HD UPPER MOUNTING BRACKET
13	DS 4420303 PIVOT ARM, HD
14	4440815 SEAL
15	4440816 BEARING
16	4440817 RACE
17	158003 SLOTTED NUT, .75 NC
18	158012 SPINDLE WASHER, SAE .75
19	150409 COTTER PIN, .125 x 1.5, PLAIN
20	4440814 DUST CAP, 2 INCH
21	151222 GREASE ZERK, .25 SELF TAPPING
22	DS 4420304 HUB BRACKET, WELDMENT, HD
23	DS 4420305 SPINDLE HUB, HD, WELDMENT
24	158002 SLOTTED NUT, .75 NC THIN
25	DS 4440785 BLADE, 18 INCH NOTCHED
26	158004 FLANGE BOLT, .375 NC x .75, G5
27	158005 FLANGE NUT, .375 NC

4450049 - HD DISC SEALER REBUILD KIT
-INCLUDES (2) BEARINGS, (2) RACES, AND (1) SEAL

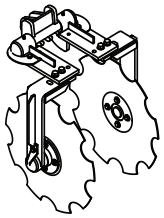

4410737 EDGE HD DISC SEALER

PROPRIETARY AND CONFIDENTIAL
THE INFORMATION CONTAINED IN THIS DRAWING IS THE SOLE PROPERTY OF DALTON AG. ANY REPRODUCTION IN PART OR AS A WHOLE WITHOUT THE WRITTEN PERMISSION OF DALTON AG IS PROHIBITED.

DRAWN BY	JEREMY NEWTON	4/28/2009
CHECKED BY		
PRINT DATE	3/5/2021	
CONFIG.	EXPLODED	
COMMENTS:		

MADE IN THE USA Dalton AG PRODUCTS
602 E. VAN BUREN ST., LENOX, IA 50851

DWG: 4410737 EDGE HD DISC SEALER

SIZE	SHEET TITLE:	REV
A	ASSEMBLY	A

SCALE: 1:8 | SHEET 1 OF 1

FOR PARTS, CALL 1.800.342.7498

5 4 3 2 1

STANDARD SHANKS AND KNIVES

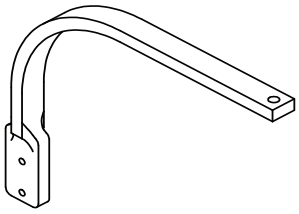

4440498 SHANK, 1 x 2

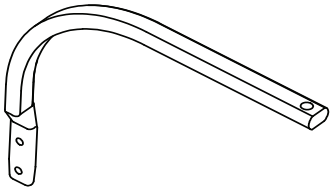

4440895 SHANK, 1.25 x 2

4440779 KNIFE, STANDARD W (1) .375 TUBE

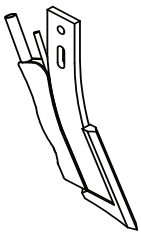

4440795 KNIFE, STANDARD W (1) .375 TUBE, (1) .75 TUBE

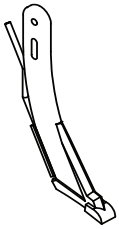

4440890 KNIFE, MINI MOLE W (1) .375 TUBE

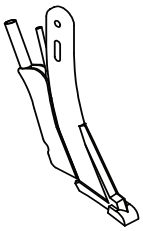

4420660 KNIFE, MINI MOLE W (1) .375 TUBE, (1) .75 TUBE

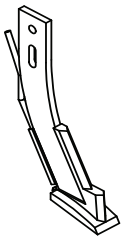

4440781 KNIFE, MOLE W (1) .375 TUBE

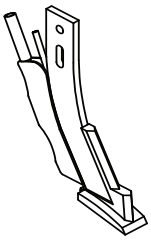

4440794 KNIFE, MOLE W (1) .375 TUBE, (1) .75 TUBE

DRAWN BY	RICH SMOTHERS	8/4/2008	
CHECKED BY			
PRINT DATE	2/17/2017		
CONFIG.	Default		

Dalton AG PRODUCTS USA
www.DaltonAg.com

PROPRIETARY AND CONFIDENTIAL
THE INFORMATION CONTAINED IN THIS DRAWING IS THE SOLE PROPERTY OF DALTON AG. ANY REPRODUCTION IN PART OR AS A WHOLE WITHOUT THE WRITTEN PERMISSION OF DALTON AG IS PROHIBITED.

COMMENTS:

DWG: STANDARD SHANKS AND KNIVES

SIZE **A** | SHEET TITLE: Sheet1 | REV A

FOR PARTS, CALL 1.800.342.7498

SCALE: 1:12 | SHEET 1 OF 1

S1264SL, SPRING LOADED SHANK CLAMP, 4X6

#	PART NUMBER	QTY.
1	S1264SL COMPLETE SPRING LOADED SHANK CLAMP	1
2	4410218 S1264SL W/O TOP BRACKET AND BOLTS	1
3	SLSC 4420281 SHANK PIVOT	1
4	SLSC 4420280 SPRING GUIDE CAP	1
5	SLSC 4420282 SPRING BOLT WELDMENT	1
6	SLSC 4431072 TOP BRACKET	1
7	SLSC 641480 SPRING	1
8	150013 NUT, .75 NC	1
9	152422 BOLT, .625 NC x 8, G5	4
10	150226 LOCK WASHER, .75, PLTD	1
11	158000 NUT, .75 NF	1
12	158001 JAM NUT,.75 NF	1
17	150011 NUT, .625 NC, LOCKING, PLTD	4
18	4441060 BOLT, .75 NC x 3, GR 8	1

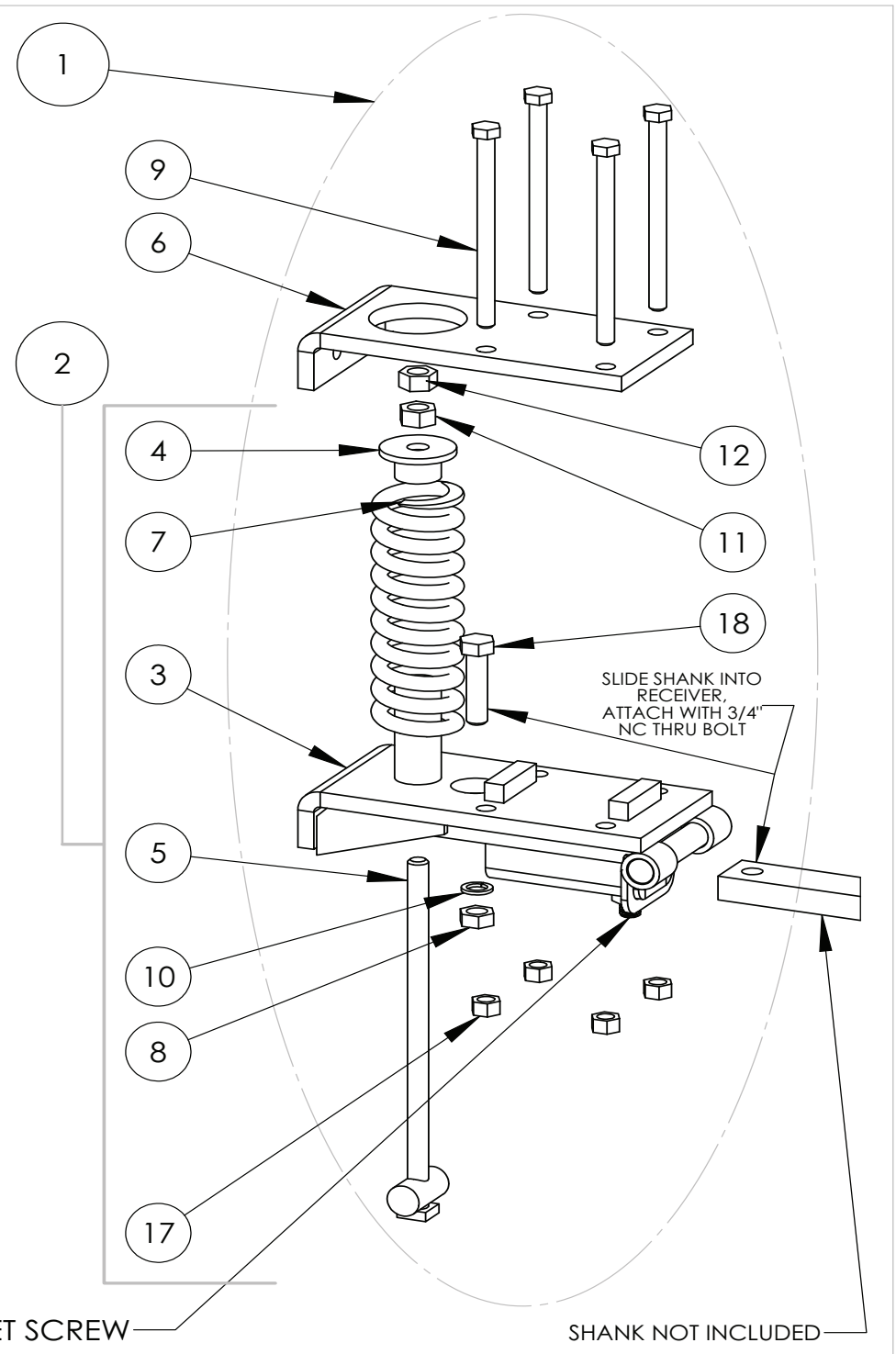

DRAWN BY	RICH SMOTHERS	4/9/2009
CHECKED BY		
PRINT DATE	12/14/2017	
CONFIG.	EXPLODED	

Dalton AG PRODUCTS USA
www.DaltonAg.com

PROPRIETARY AND CONFIDENTIAL
THE INFORMATION CONTAINED IN THIS DRAWING IS THE SOLE PROPERTY OF DALTON AG. ANY REPRODUCTION IN PART OR AS A WHOLE WITHOUT THE WRITTEN PERMISSION OF DALTON AG IS PROHIBITED.

COMMENTS:

S1264SL-SPRING LOADED SHANK CLAMP

DWG: SLSC S1264SL-SPRING LOADED SHANK CLAMP

SIZE	SHEET TITLE:	REV
A	COMPLETE UNIT EXPLODED	A

SCALE: 1:6 SHEET 1 OF 1

4410707 EDGE SPRING LOADED SHANK CLAMP, 4X6, COMPLETE

4410707 EDGE SPRING LOADED SHANK CLAMP, 4x6, COMPLETE

ASSEMBLY

REV.	DESCRIPTION	DATE	APPROVED
A	REPLACED 4431072 WITH 4421600	7/20/2020	CB
B	ADDED 4410851 COLUMN	11/22/2021	DES
C	4432914 WAS 442143, ADDED 4441725, REMOVED 140375 AND 4440818	2/9/2023	JNJ

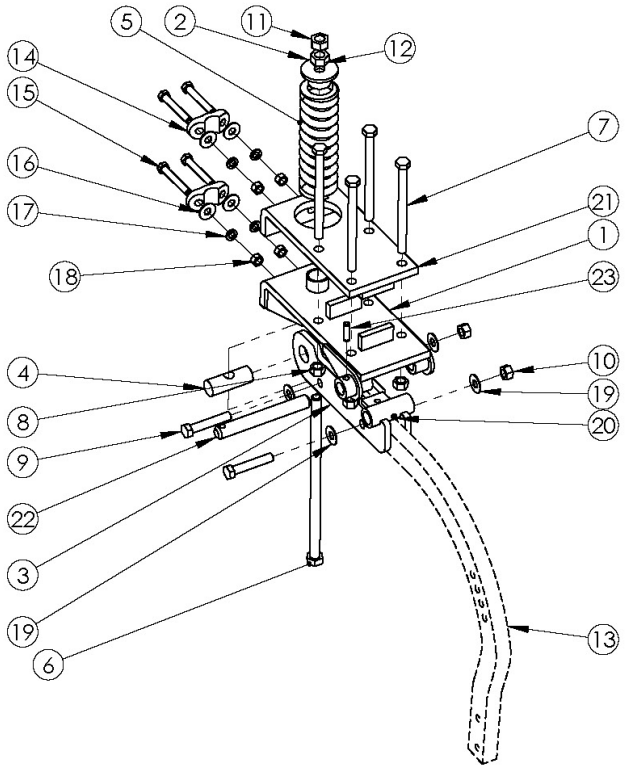

4410851	#	PART NUMBER	DESCRIPTION	Q
*	1	4421403	SHANK PIVOT, 4x6, EDGE BENT	1
*	2	4420280	SPRING GUIDE CAP	1
*	3	4421449	SHANK ROCKER, 4x6	1
*	4	4435889	SPRING BOLT ROCKER STOP, EDGE BENT	1
*	5	641480	SPRING	1
*	6	SLSC 4440813	SPRING BOLT .75 NF x 14.75	1
	7	152422	BOLT, .625 x 8, G5	4
	8	150011	NUT, .625 NC, LOCKING, PLTD	4
	9	4440453	BOLT .625 x 3.5 NC GRD 8 PLTD	2
	10	188082	NUT, .625 NC, CENTERLOCK, PLTD	2
*	11	158001	JAM NUT, .75 NF	1
*	12	158000	NUT, .75 NF	1
	13	4441156	EDGE BENT SHANK	1
	14	4441105	COULTER SHAFT CLAMP	2
	15	152236	BOLT .5 x 3.5 NC, G5	4
	16	150220	FLAT WASHER, .5 PLTD	4
	17	150218	LOCK WASHER, .5 PLTD	4
	18	150008	NUT, .5 NC, GR 5, PLTD	4
	19	150223	FLAT WASHER, .625 STD PLN	4
*	20	151222	Grease Fitting	1
	21	4421600	TOP BRACKET, 4 X 6	1
	22	4432914	PIN, 1 X 7.25, HEADLESS	1
	23	4441725	ROLL PIN, 7/16" X 1.5", ZINC PLATED	1

C

NOTE:
4441156 EDGE BENT SHANK NOT INCLUDED IN ASSEMBLY, SHOWN FOR REFERENCE ONLY

4410707 EDGE SPRING LOADED SHANK CLAMP, 4x6, COMPLETE

UNLESS OTHERWISE SPECIFIED
TOLERANCES TO BE:
ANGLES : ± 1.0°
FRACTIONS <6" : ±1/32, >6" :1/16
X.X : ± 0.06
X.XX : ± 0.03
X.XXX : ± 0.005

DRAWN BY	Jeremy Newton	8/10/2018
CHECKED BY		
PRINT DATE	2/9/2023	
CONFIG.	EXPLODED	
COMMENTS:		

Dalton AG PRODUCTS
602 E. VAN BUREN ST., LENOX, IA 50851

DWG: 4410707 EDGE SPRING LOADED SHANK CLAMP, 4X6, COMPLETE

SIZE A | SHEET TITLE: Sheet1 | REV C

SCALE: 1:10 | SHEET 1 OF 1

PROPRIETARY AND CONFIDENTIAL
THE INFORMATION CONTAINED IN THIS DRAWING IS THE SOLE PROPERTY OF DALTON AG. ANY REPRODUCTION IN PART OR AS A WHOLE WITHOUT THE WRITTEN PERMISSION OF DALTON AG IS PROHIBITED.

FOR PARTS, CALL 1.800.342.7498

5 4 3 2 1

YETTER 20” COULTER ASSEMBLY

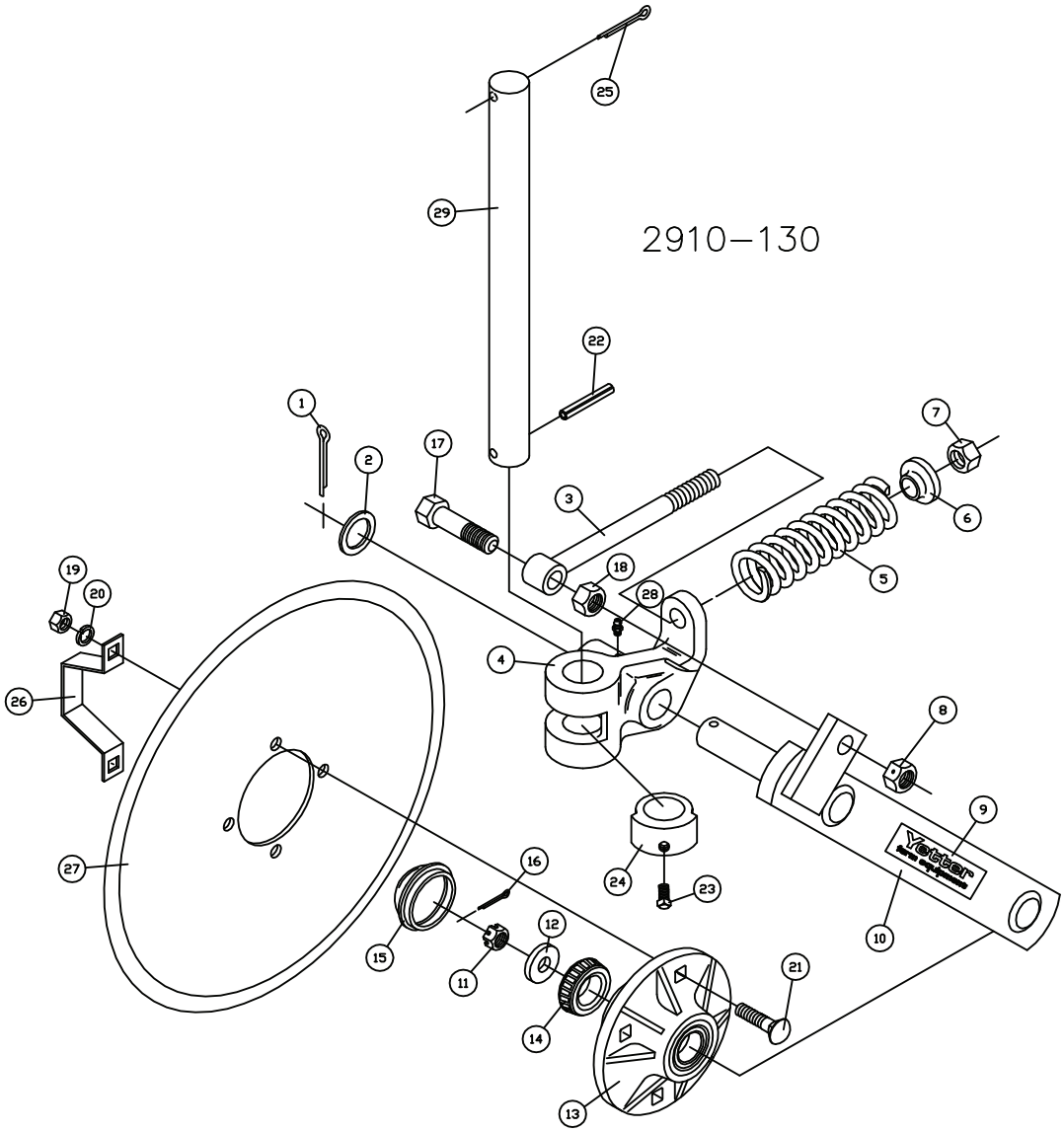

DET	QTY	PART NO.	DESCRIPTION
1	1	2531–125	1/4” X 1–3/4” COTTER PIN
2	1	2526–561	1–17/64”ID X1–7/8”OD X14GA WASHER
3	1	2570–125	EYEBOLT
4	1	2910–320	PIVOT
5	1	2910–311	SPRING
6	1	2910–302	SPRING BUSHING
7	1	2520–516	3/4”–10 NY–LOCK HEX NUT
8	1	2520–511	3/4”–16 LOCK HEX NUT
9	1	2565–162	DECAL–YETTER
10	1	2910–201	PIVOT ARM
11	1	2520–469	5/8”–18 SLOTTED HEX NUT
12	1	2526–449	5/8” FLATWASHER, 1/4” THICK
13	1	2900–102	HUB SUB–ASSEMBLY
	1	2550–027	CONE, LM67048
	1	2550–066	TRIPLE LIP SEAL
	1	2900–105	HUB/CUP PRESSED ASSEMBLY
	1	2533–110	1/4”–28 LUBE FITTING–SELF TAP
	1	2550–029	CUP, LM67010

DET	QTY	PART NO.	DESCRIPTION
14	1	2550–027	CONE, LM67048
15	1	2570–375	DUST CAP
16	1	2531–102	1/8” X 1–1/4” COTTER PIN
17	1	2502–410	3/4”–16 X 3” HEX BOLT GRADE 5
18	1	2520–508	3/4”–16 HEX NUT
19	4	2520–352	1/2”–13 HEX NUT
20	4	2525–352	1/2” LOCKWASHER
21	4	2505–337	1/2”–13 X 1 1/4” CARRIAGE BOLT GRADE 5
22	1	2530–208	3/8” X 2–1/2” ROLL PIN
23	1	2503–379	5/8”–11 X 1” SET SCREW
24	1	2910–301	SWIVEL COLLAR
25	1	2531–161	5/16” X 2–1/2” COTTER PIN
26	1	2987–301	DUST CAP RETAINER
27	1		COULTER BLADE–REFERENCE ONLY
28	1	2533–110	1/4”–28 LUBE FITTING–SELF TAP
29	1		SHANK 1–1/2” ROUND–REFERENCE ONLY

05/12/2016 S431

GROVE COULTER ASSEMBLY

B.O.M FOR COULTER ASSEMBLY

ITEM NO.	PART #	DESCRIPTION	QTY.
1	GC3000	Cast Coulter Knuckle	1
2	GC3005	Nylon Shaft Bushing	2
3	GC3010	Nylon Knuckle Bushing	1
4	GC3105	Lock Collar	1
5	GC4075	5/8-11x1 Sq Hd Set Pt	1
6	GC2005	Coulter Arm	1
7	GC3035	G120 Coulter Hub	1
8	GC5005	Dust Cap Keeper	1
9	GC3070	Spring Rod	1
10	GC3060	Nylon Spring Bushing	1
11	GC3055	Spring Bolt	1
12	GC3065	Spring Nut	2
13	GC3075	Spring	1
14	GC3080	Spring Alignment Casting	1
15	GC3085	Spring Lock Nut	1
16	GC3090	Washer	1
17	G905942	Cotter Pin	1
18	GC3095	Attachment Arm	1
19	GC3102	Knife Bracket	1
20	GC5010	Knife	1
21	GC3205	Injector Mount	1

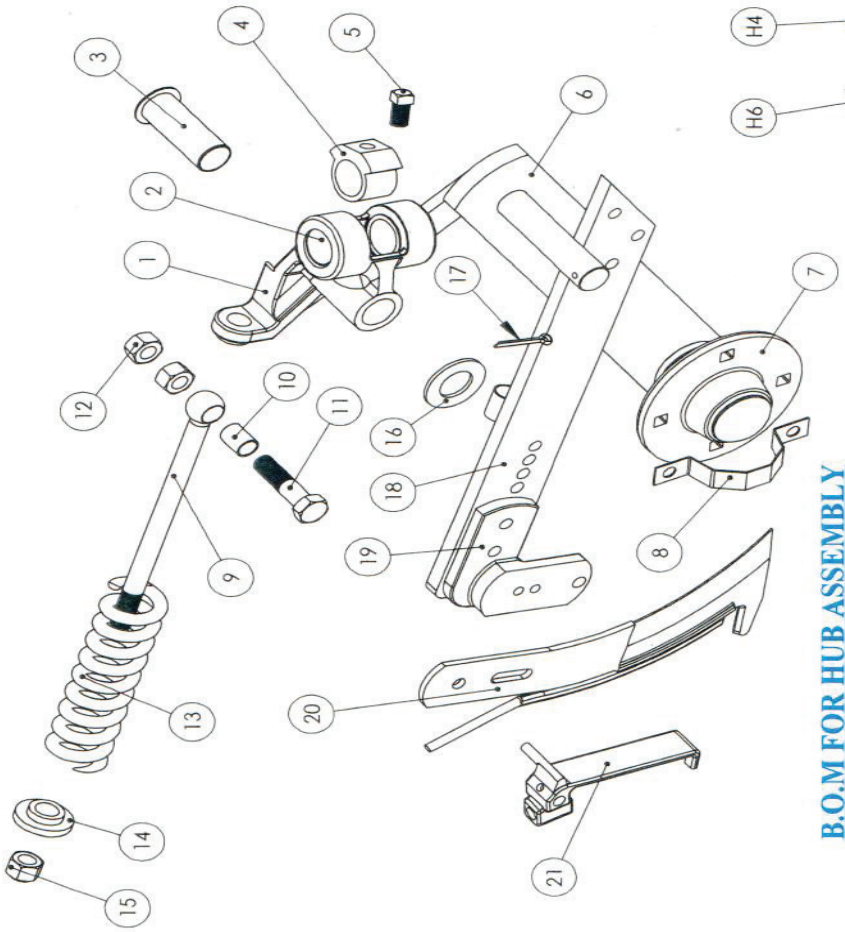

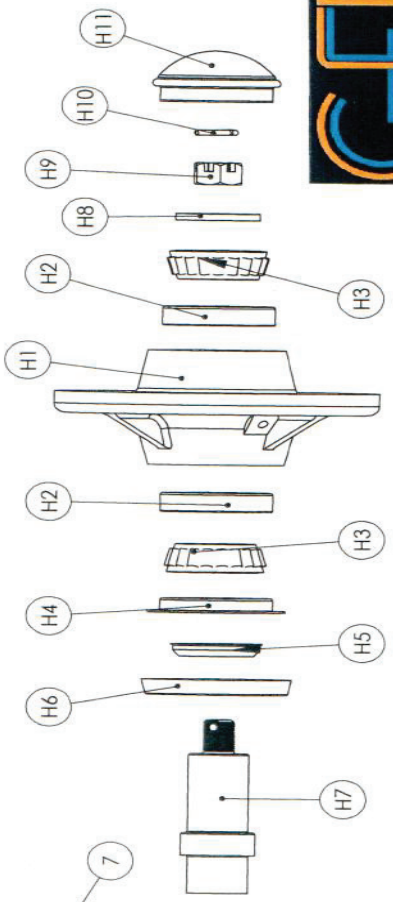

B.O.M FOR HUB ASSEMBLY

ITEM NO.	PART #	DESCRIPTION	QTY.
H1	GC3035	G120 Coulter Hub	1
H2	G910257	LM67010 Cup	2
H3	G910259	LM67048 Bearing	2
H4	GC3040	Seal Counterface	1
H5	GC3045	Coulter Seal	1
H6	GC3050	Seal Protector	1
H7	GC3020	Coulter Spindle	1
H8	G913611	Washer	1
H9	G912954	Slotted Hex Nut	1
H10	G905936	Cotter Pin	1
H11	G909970	Dust Cap	1

The American Society of Agricultural Engineers has established minimum marking recommendations for agricultural field equipment that is towed on or across public highways. These standards include:

1. Implements which obscure the rear tractor lighting; or are more than 13 ft. wide; or extend to the left or right of the tractor center by 79 in. and beyond the left or right extremity of the tractor; or extend more than 33 ft. to the rear of the tractor hitchpoint should have the following lighting to meet minimum safety standards:

   a. One red tail lamp mounted to the rear of the implement and as far to the left as possible. This must face rearward only.

   b. Two amber flashing lights, visible from front and rear, and as far to the left and right as possible. These should be mounted to within 16 in. of extremities and within 39 in. to 10 ft. in height.

   c. Non-symmetrical equipment, such as moldboard plows or windrowers, extending only to the left or right may have one amber flashing light mounted to within 16 in. of the extremity.

2. Implements extending more than 4 ft. to the left of the center of the tractor should have at least one amber reflector visible to the front, located to the extreme left of the implement.

3. Implements exceeding more than 10 ft. behind the hitchpoint should have at least two amber reflectors visible from both the left and right sides. Reflectors should be spaced no more than 5 ft. apart, starting from the hitch. The rear most reflector should be positioned as far to the rear as possible.

4. Implements extending more than 4 ft. to the rear of the hitchpoint or more than 4 ft. to the left or right of the center of the tractor should have at least two red reflectors visible to the rear.

LOCATION

Dual and single lamp units can be mounted in a variety of locations and positions using the following guidelines:

1. Amber must always be mounted either the top or outer-most left or right position. It should be able to be seen from both the front or rear of the implement at all times.

2. Single lamps may be used in place of a dual lamp, if mounting is a problem.

3. If the amber lamp cannot be seen from both front and rear of the implement at the same time, a second lamp is necessary and should be positioned as far forward as possible.

4. Red is to face rearward only.

Note: All lamps can be mounted horizontally, vertically, upright or inverted. However, care should be taken to adequately protect the base from excess water buildup when inverting.

MOUNTING

All units have provisions for multiple mounting. The outermost holes will accept 1/4" machine or lag screws and will allow thru-panel bolting. The inner holes are designed to accept 1/4" lag or self-drilling screws only. Maximum length not to exceed 1" beyond panel. A 9/32" dia. hole size is recommended.

If holes are required to route wires and connectors from lamp units, a 3/4" dia. hole is recommended.

The diagram below should be used as a guide for mounting hole

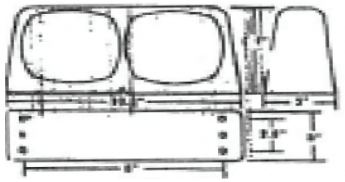

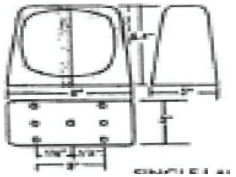

DECAL LAYOUT

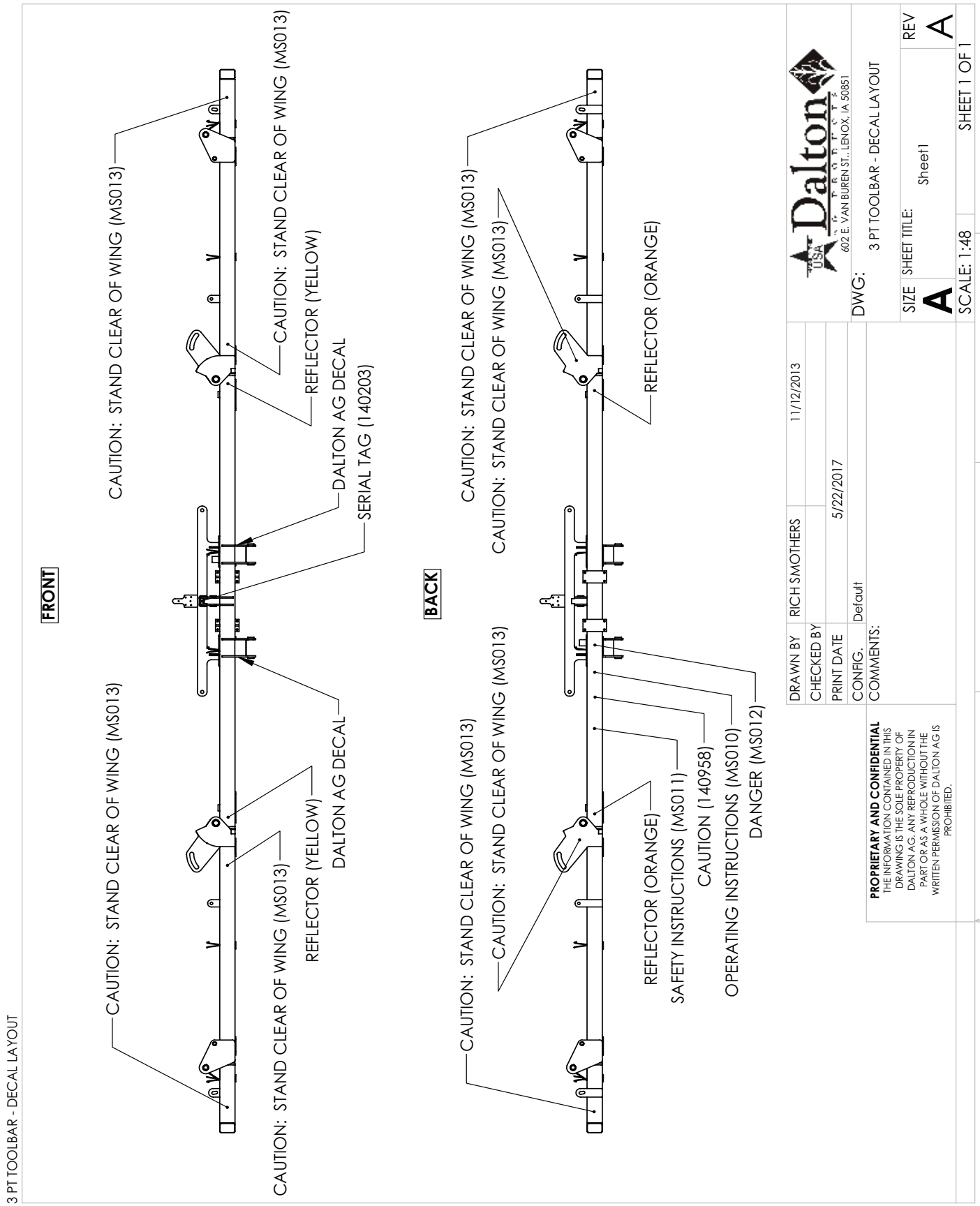

PARTS ORDERING PROCEDURE

Your Dalton Ag dealer is interested in your new fertilizer application equipment and has the desire to help you get the most value from it. Through the help of this manual, you will find you can do some of the regular maintenance yourself. For parts and service, contact the Dalton Ag Dealership from which you purchased your fertilizer application equipment or your local Dalton Ag dealer.

When replacement parts are required, consult the applicable illustration and parts list to obtain the correct part name and number. When requesting a replacement part, always include the following information:

1. Complete Part Number
2. Description
3. Quantity Required
4. Machine and Model Number
5. Machine Serial Number - located on the topside of the frame near hitch
6. Provide complete name and address for where and how parts are to be shipped.

NOTE: Right and left hand parts and sides of the units are determined by standing at the rear and facing in the direction of forward travel.

EQUIPMENT MODEL:_____

EQUIPMENT SERIAL NO.:_____

DATE OF PURCHASE:_____

NAME OF DEALER:_____

DEALER'S PHONE NUMBER:_____

Thank you for your business!

DaltonAg.com 602 E. Van Buren Lenox, Iowa 50851 **800.342.7498**

NOTES

NOTES

Dalton

AG PRODUCTS

www.daltonag.com

602 E. VAN BUREN | LENOX, IOWA 50851 | 800-342-7498