Dalton
AG PRODUCTS

OPERATING AND PARTS MANUAL

STEALTH LIQUID APPLICATORS

2025

DaltonAg.com 602 E. Van Buren Lenox, Iowa 50851 800.342.7498

TABLE OF CONTENTS

TO YOU THE OWNER..... 1
LIMITED WARRANTY STATEMENT..... 2
NEW MACHINE CHECKOUT..... 3
IMPLEMENT SAFETY..... 4
PRE-SEASON CHECK..... 5
BOLT TORQUE CHART..... 6
LOADED RADIUS OF VARIOUS TIRES..... 7
LIQUID INJECTOR NOZZLE CHART..... 8
GPA TABLE..... 9
DLQ TONGUE - JACK AND HITCH OPTIONS..... 11
DLQ TOOLBAR CONTROL ARM..... 12
DLQSTD AXLE, SPINDLE, AND HUB..... 13
1002194, 819 8-BOLT HUB ASSEMBLY, COMPLETE..... 14
DLQHD AXLE, SPINDLE, AND HUB..... 15
4410248, 873 10-BOLT HUB ASSEMBLY, COMPLETE..... 16
DLQHD 2000 AXLE, SPINDLE, AND HUB..... 17
4410337, 881 10-BOLT HUB ASSEMBLY, COMPLETE..... 18
AXLE ASSEMBLY..... 19
DLQ SINGLE FOLD TOOLBAR..... 20
DLQ FRONT FOLD TOOLBAR..... 21
DLQ DOUBLE FOLD TOOLBAR..... 22
DLQHD 60’ TOOLBAR..... 23
TOOLBAR CYLINDER STOP..... 24
DLQ LIGHT KIT..... 25
DLQHD 60' DOWNPRESSURE..... 26
DLQ DOWNPRESSURE KIT..... 27
DLQ DOWNPRESSURE MOUNT & HARDWARE..... 28
DLQ DOWNPRESSURE CALIBRATION..... 29
CENTER SECTION HINGE CONFIGURATIONS..... 30
DLQ GULLWING MOUNT & HARDWARE..... 32
DLQ GULLWING OPERATING INSTRUCTIONS..... 33
LIFT TEE HARDWARE & INSTALLATION..... 34
DLQ WING LOCK..... 35
2 PIN GAUGE WHEEL AND BRACKET..... 36
4410086, 888 6-BOLT HUB ASSEMBLY, COMPLETE..... 37
GROUND DRIVE ASSEMBLY..... 38
VISA FLOW LAYOUTS..... 39
DLQ TANK PLUMBING..... 43
YETTER COULTER ASSEMBLY..... 50
NOZZLE AND COULTER ASSEMBLY..... 51
GROVE COULTER ASSEMBLY..... 52
GROVE KNIFE AND INJECTION..... 53
DECAL LAYOUT..... 54
PARTS ORDERING PROCEDURE..... 55

TO YOU, THE OWNER

Your Dalton Ag Equipment is the most modern, up-to-date, versatile, machine available for fertilizer application. The machine is the result of many years of experience, research, development and testing of equipment for fertilizer application. It is soundly engineered and carefully built to rigid specifications. It is of rugged and simple construction, with a minimum of moving parts.

However, to obtain maximum performance from your Dalton Ag Equipment, it is necessary to follow the instructions and safety suggestions in this manual. Each section has been carefully prepared for the purpose of providing needed and valuable information to the owner and operator. Each operator of this unit should be familiar with the contents of this manual. Keep it in a safe and convenient location. THERE ARE MANY SAFETY SUGGESTIONS (CAUTION AREAS) PRINTED THROUGHOUT THIS MANUAL. CAREFULLY READ THEM ALL BEFORE OPERATING THIS UNIT.

DESIGN IMPROVEMENTS

Dalton Ag Products follows a policy of continuous products improvement. We therefore reserve the right to make design improvements, and changes in specifications and prices, without incurring obligations to make revisions or additions to equipment previously sold.

REGISTER WARRANTY ONE OF FOUR WAYS

- Register on-line at:
  www.daltonag.com
- Fax your completed warranty registration form to:
  641-569-7033
- Email your completed warranty registration form to:
  office@daltonag.com
- Mail your completed warranty registration form to:
  Dalton Ag, Inc.
  P.O. Box 70
  Lenox, IA 50851

LIMITED WARRANTY STATEMENT

DALTON AG, INC. warrants to the original purchaser only that all products manufactured under the Dalton Ag and Mobility Brands will be free from defects in material and workmanship under normal use and service.

DALTON AG's obligation under this warranty is limited to repairing or replacing, as it may elect, free of charge and without charge for installation, at the place of business of a dealer or distributor authorized to handle the equipment covered by this warranty or at a DALTON AG facility, any parts that prove, in DALTON AG's judgment, to be defective in material or workmanship within two (2) years after delivery to the original purchaser. DALTON AG shall not be liable for personal injuries or any special or consequential damages of any kind, either direct or indirect. This warranty is subject to acts of God, fire and existing conditions of supply and demand, production, ability or inability to deliver, or for any other valid reason beyond the reasonable control of DALTON AG. No distributor, dealer, agent or DALTON AG employee (other than DALTON's President in writing) is authorized to extend or make any other or further express or implied warranty or incur any additional obligation on DALTON AG's behalf in connection with the sale of this product.

Customer Responsibility

Product Registration - It is a condition of this warranty that the original purchaser fill out the warranty card furnished by DALTON AG and return it to DALTON AG to be recorded in DALTON AG's owner file. Registration may also be done on line at www.DaltonAg.com/warrantyregistration. If the original purchaser's card or electronic registration is not on file at DALTON AG's office, the warranty period will extend only from date equipment was picked up or shipped from the DALTON AG plant.

Maintenance - It is the customer's responsibility to maintain their equipment in accordance with the instructions provided in the Operator's Manual. DALTON AG recommends that you keep records and receipts as the customer may be required to verify the maintenance instructions have been followed.

Operation – It is the customer's responsibility to operate the equipment only for the purpose for which it was designed and in accordance with all safety and operational recommendations contained in the Operator's Manual. If a defect in materials or workmanship occurs, it is the customer's responsibility to cease operating the equipment until authorized repairs are made**.** **Damage incurred from continued operation after a defect is discovered may not be covered by this warranty.**

What this Warranty Covers

This warranty covers failures caused by defects in materials or workmanship only.

This Warranty does not cover failures caused by:

- Improper operation
- Natural calamities
- Unauthorized modifications
- Unauthorized repairs
- Use of Non DALTON AG parts
- Neglected maintenance
- Usage contrary to the intended purpose of the product

This Warranty does not cover replacement of Wear or Maintenance Items including, but not limited to:

- Lubricants
- Filters
- Hoses
- Tires
- Disks
- Chains
- Idlers
- Blades
- Belts
- Bearings

This Warranty does not cover:

Pickup and delivery of the equipment
Service Calls or Travel Time to and from sites
Rental of replacement equipment during repair period
Products that have been declared a total loss and subsequently salvaged
Overtime labor charges

Parts Warranty

DALTON AG warrants its replacement parts against defects in materials or workmanship for a period of 90 days or the remainder of the product warranty, whichever is longer under the terms set out above. Remedy for defective replacement parts for units that are beyond the original product warranty, will be limited to replacement of the failed part.

NEW MACHINE CHECKOUT

1. All hardware properly tightened.
2. Lubrication of grease fittings.
3. Wheel bolts tightened to proper specs.
4. Check hydraulic hoses and fittings.

MAINTENANCE

1. Visually inspect machine daily.
2. Repair or replace any worn or damaged parts.

LUBRICATION SCHEDULE

Careful observance of the following lubrication schedule is the best preventative maintenance program for your Dalton Ag Equipment. We recommend that you establish a firm program to insure lubrication in strict compliance with the following schedule. Use only good grade pressure gun type grease unless otherwise specified.

Daily Lubrication

Hinge points

Weekly Lubrication

Wheel bearings
Coulters

Annual Lubrication

Check all bearings - repack or replace as needed

IMPLEMENT SAFETY

In addition to design and configuration of equipment, safety and accident prevention are dependent upon the awareness, concern, and proper training of personnel involved in the operation, transport, maintenance, and storage of equipment. Failing to follow these safety messages can result in machine damage, personal injury, and/or death.

- Before operating your applicator, thoroughly read and understand your operator's manual. If you do not understand any portion of the operator's manual, contact your local Dalton Ag dealer immediately for clarification.
- Furnish this manual to a new operator.
- Tow with tractor only. Never transport applicator unit in excess of 20 MPH. Maintain a safe speed.
- Use a Slow-Moving-Vehicle (SMV) emblem when transporting.
- Be sure safety decals are readable. All safety related decals must be replaced if the applicator is painted or the decals are otherwise rendered unreadable.
- Install transport link before transporting.
- Always check for overhead obstacles in transporting applicator and before folding or unfolding the wings of the unit.
- Never permit riders on the applicator or tractor.
- Proceed slowly on rough or slippery roadways, on side hills, and around curves to avoid tipping.
- Reduce speed when approaching ditches and corners. Do not make sharp turns with brakes.
- Machinery should be operated only by persons familiar to the tractor, applicator unit, and the safety related items.
- Do not stand on, or straddle tongue when unhitching.
- Do not modify or permit anyone to modify this applicator and any of its components without first consulting your Dalton Ag dealer.
- Do not lubricate, adjust, or repair when applicator unit is in motion.
- Use only approved replacement parts.
- To prevent serious injury from high pressure fluid, NEVER attempt to inspect, service, or disassemble any part of the hydraulic system until all pressure is relieved by lowering the toolbar to the ground (or secure with cylinder transport stops provided).
- High-pressure fluid is nearly invisible but has enough force to penetrate the skin. Never use the hands to search out a suspected leak. If injured by escaping fluid, obtain medical attention at once to minimize chance of infection. Wear safety glasses or goggles to avoid eye injury when working on the hydraulic system.
- Always check torque on wheel bolts before transporting.

PRE-SEASON CHECK

1. Carefully review the safety suggestions in this manual.

2. Check all bolts for proper tightness. When the implement is new, check after one hour and every few hours of operation.

3. Replace ground tools that are severely worn, broken or damaged.

4. Check tires for proper inflation. All tires should be inflated equally to avoid side draft.

5. Check the wheel lug bolts daily, keep wheel bolts tight.

6. Grease all fittings.

7. Inspect, repack, or replace (if necessary) wheel bearings and seals.

8. Check hoses, hose routing and hydraulic cylinders. Any indication of leakage or fraying of hoses should be corrected.

OFF-SEASON STORAGE

Following these suggestions will extend service life and satisfaction:

1. A little time and effort spent cleaning your machine before storing will repay in longer service, easier operation and higher resale value.

2. Inspect for worn or damaged parts. Replace, if required, and avoid delays the next season.

3. Repaint all areas where the original paint is worn off.

4. Lubricate your implement.

5. Grease all exposed metal surfaces of ground tools.

6. Store the unit inside a shed to protect from weather and on a level area with wings down. The ground working parts should rest on boards.

7. Disconnect the rod end of the lift cylinders and retract the rod into the cylinder to prevent the cylinder rod from rusting.

8. Cap or plug all hydraulic oil lines, if the cylinders are removed. This is to prevent any contaminants from entering the hydraulic system.

9. Raise tires off ground or remove and store in cool dry location out of sunlight.

IMPORTANT : Over tightening hardware can be as damaging as under tightening. Tightening beyond recommended torque will reduce the fastener's shock load capacity.

BOLT TORQUE CHART

SIZE	SAE GRADE 2 ASSEMBLY TORQUE DRY	SAE GRADE 2 ASSEMBLY TORQUE LUBRICATED	SAE GRADE 5 ASSEMBLY TORQUE DRY	SAE GRADE 5 ASSEMBLY TORQUE LUBRICATED	SAE GRADE 8 ASSEMBLY TORQUE DRY	SAE GRADE 8 ASSEMBLY TORQUE LUBRICATED	L9 ASSEMBLY TORQUE LUBRICATED
1/4-20	66*	49*	8	75*	12	9	11
1/4-28	76*	56*	10	86*	14	10	13
5/16-18	11	8	17	13	20	18	21
5/16-24	12	9	19	14	25	20	23
3/8-16	20	15	30	23	45	30	33
3/8-24	23	17	35	25	50	35	38
7/16-14	30	24	50	35	70	55	60
7/16-20	35	25	55	40	80	60	65
1/2-13	50	35	75	55	110	80	95
1/2-20	55	40	90	65	120	90	105
9/16-12	65	50	110	80	150	110	140
9/16-18	75	55	120	90	170	130	150
5/8-11	90	70	150	110	220	170	185
5/8-18	100	80	180	130	240	180	205
3/4-10	160	120	260	200	380	280	290
3/4-16	180	140	300	220	420	320	355
7/8-9	190	140	400	300	600	460	505
7/8-14	210	155	440	320	660	500	585
1-8	220	160	580	440	900	680	775
1-14	240	170	640	480	1000	740	900
1 1/8-7	300	220	800	600	1280	960	1150
1 1/8-12	340	260	880	660	1440	1080	1325
1 1/4-7	420	320	1120	840	1820	1360	1600
1 1/4-12	460	360	1240	920	2000	1500	1750
1 3/8-6	560	420	1460	1100	2380	1780	-----
1 3/8-12	640	460	1680	1260	2720	2040	-----
1 1/2-6	740	560	1940	1460	3160	2360	3250
1 1/2-12	840	620	2200	1640	3560	2660	3650

ITEMS WITH * = INCH POUNDS
ALL OTHERS = FOOT POUNDS

WARNING: Never work around any raised implement while in the raised position without using safety lockups.

LOADED RADIUS OF VARIOUS TIRES - FOR USE IN SETTING JOHN BLUE GROUND-DRIVEN PUMPS

TIRE SIZE	LOADED RADIUS	TIRE SIZE	LOADED RADIUS
6.70-15SL	12.9	9.00-20	19.0
7.60-15SL	13.4	10.0-20	19.6
9.5L-15SL	13.6	11.0-20	20.1
10.0-15SL	15.1	12.0-20	20.6
11L-15SL	13.5	15.0-22.5	20.0
12.5L-15SL	14.5		
9.00-16SL	14.7		
11L-16SL	13.9		
12.5L-16SL	15.0		
13.5L-16.1SL	17.5		
16.5L-16.1SL	17.3		
4.8-8	7.5		
18-9.5	7.8		
16 X 6.50-8	7.4		

LIQUID INJECTOR NOZZLE CHART

NOZZLE SELECTION

1. To select the proper nozzle size, first determine the gallons per acre and speed that is going to be used. Go to the table for the proper row spacing.

2. Find the speed across the top, go down to the “Gallon Per Acre” and read the nozzle size in the box.

3. Order nozzle by m.p.h. and gallons per acre.

FORMULA TO CONVERT POUNDS PER ACRE TO GALLONS PER ACRE

Pounds per Acre/Percent of Nitrogen = Total Pounds per Acre/pounds per Gallon = Gallons per Acre

EXAMPLE: 100 (# per Acre) / .28 (28%) = 357 (# per Acre) / 10.65 (#per Gallon) = 33.5 (GPA)

NOTE: If 1/2 rate is needed on outside shanks, order two nozzles with half the capacity. If 1 1/2 rate is needed on outside shanks, order two nozzles with 1 1/2 times the capacity.

******REFER TO THE FOLLOWING RATE CHART FOR TIPS AND APPLICATION******

GPA 30” SPACING

gallons per acre x 1.15 = water per acre

TIP NUMBER	ORIFICE DIAM.	PSI	CAP .1 NOZZLE GPM	5 MPH GPA	6 MPH GPA	7 MPH GPA	8 MPH GPA	9 MPH GPA	10 MPH GPA
TP0004	.055	20	.28	11	9	8	7		6
H1/4U-SS0004		30	.35	14	12	10	9	8	7
		40	.40	16	13	11	10	9	8
		50	.45	18	15	13	11	10	9
		60	.49	19	16	14	12	11	10
TP0005	.061	20	.35	14	12	10	9		
H1/4U-SS0005		30	.43	17	14	12	11	9	8
		40	.50	20	16	14	12	11	10
		50	.56	22	18	16	14	12	11
		60	.61	24	20	17	15	13	12
TP0006	.067	20	.42	17	14	12	10	9	8
H1/4U-SS0006		30	.52	20	17	15	13	11	10
		40	.60	24	20	17	15	13	12
		50	.67	26	22	18	17	15	13
		60	.73	28	24	20	18	16	15
TP0008	.078	20	.57	23	19	16	14	13	11
H1/SS0008		30	.69	27	22	19	17	15	13
		40	.80	32	26	22	20	17	16
		50	.89	53	29	25	22	19	17
		60	.98		32	28	24	21	19
TP00010	.086	20	.71	28	23	20	18	16	14
H1/4U-SS0010		30	.87	34	28	24	21	19	17
		40	1.00	39	33	28	24	22	20
		50	1.12	44	36	32	28	24	22
		60	1.22	48	40	34	30	26	24
TP00015	.107	20	1.06	42	35	30	26	23	21
H1/4U-SS0015		30	1.30	51	42	36	32	28	26
		40	1.50	59	49	42	37	33	30
		50	1.68	66	55	47	41	36	33
		60	1.84	72	60	51	45	40	36
TP00020	.125	20	1.41	56	47	40	35		28
H1/4U-SS0020		30	1.73	68	57	50	43	38	34
		40	2.00	80	66	56	50	44	40
		50	2.24	88	74	64	56	49	44
		60	2.44	96	80	70	60	53	48
TP00030	.140	20	2.12	84	70	60	52		42
H1/4U-SS0030		30	2.60	102	86	74	64	57	51
		40	3.00		99	84	74	66	59

**** 15” ROW CONVERSION - X 2
**** 36” ROW CONVERSION - X .83

To determine the orifice plates you need, use the following equations:

$$\text{GPM (per nozzle)} = \frac{\text{GPA} \times \text{MPH} \times \text{W}}{5{,}940}$$

$$\text{GPA} = \frac{5{,}940 \times \text{GPM (per nozzle)}}{\text{MPH} \times \text{W}}$$

W = Nozzle spacing (in inches) for broadcast spraying.
= Spray width (in inches) for single nozzle, band spraying or boomless spraying.
= Row spacing (in inches) divided by the number of nozzles per row for directed spraying.

NOTE: Always insert Orifice Plate with the side marked with the number facing the outlet.

FOR ORIFICE SIZE	USE MESH SIZE
15 and smaller	200
16–39	100
40–70	50
72 and larger	—

Tabulated flow rates are for spraying water into air at atmospheric pressure. If your application creates backpressure, or if spraying into a liquid, measure and calibrate to ensure proper application rates.

	GPM						
	5 PSI	10 PSI	20 PSI	30 PSI	40 PSI	50 PSI	60 PSI
CP4916-008	0.003	0.004	0.006	0.007	0.008	0.009	0.010
CP4916-10	0.005	0.007	0.009	0.011	0.013	0.015	0.016
CP4916-12	0.007	0.010	0.013	0.016	0.019	0.021	0.023
CP4916-14	0.009	0.013	0.018	0.022	0.025	0.028	0.031
CP4916-15	0.010	0.015	0.021	0.025	0.029	0.032	0.036
CP4916-16	0.012	0.017	0.023	0.029	0.033	0.037	0.040
CP4916-18	0.015	0.021	0.030	0.036	0.042	0.047	0.051
CP4916-20	0.018	0.026	0.037	0.045	0.052	0.058	0.064
CP4916-22	0.022	0.031	0.043	0.053	0.061	0.068	0.075
CP4916-24	0.026	0.037	0.052	0.064	0.074	0.083	0.091
CP4916-25	0.028	0.040	0.056	0.068	0.079	0.088	0.097
CP4916-26	0.030	0.043	0.061	0.074	0.086	0.096	0.105
CP4916-27	0.032	0.046	0.064	0.079	0.091	0.102	0.111
CP4916-28	0.035	0.049	0.069	0.085	0.098	0.110	0.120
CP4916-29	0.038	0.054	0.076	0.094	0.108	0.121	0.132
CP4916-30	0.040	0.057	0.081	0.099	0.114	0.127	0.140
CP4916-31	0.043	0.062	0.087	0.107	0.123	0.138	0.151
CP4916-32	0.048	0.068	0.095	0.117	0.135	0.151	0.165
CP4916-34	0.052	0.074	0.104	0.127	0.147	0.164	0.180
CP4916-35	0.056	0.079	0.111	0.136	0.157	0.176	0.192
CP4916-37	0.061	0.086	0.122	0.149	0.172	0.192	0.211
CP4916-39	0.068	0.096	0.135	0.165	0.191	0.214	0.234
CP4916-40	0.072	0.102	0.144	0.177	0.204	0.228	0.250
CP4916-41	0.075	0.106	0.149	0.183	0.211	0.236	0.258
CP4916-43	0.082	0.116	0.163	0.200	0.231	0.258	0.283
CP4916-45	0.088	0.125	0.177	0.217	0.250	0.280	0.306
CP4916-46	0.095	0.135	0.191	0.234	0.270	0.302	0.331

	GPM						
	5 PSI	10 PSI	20 PSI	30 PSI	40 PSI	50 PSI	60 PSI
CP4916-47	0.097	0.138	0.194	0.238	0.275	0.307	0.337
CP4916-48	0.101	0.143	0.202	0.248	0.286	0.320	0.350
CP4916-49	0.104	0.148	0.209	0.255	0.295	0.330	0.361
CP4916-51	0.116	0.165	0.233	0.285	0.329	0.368	0.403
CP4916-52	0.118	0.168	0.237	0.290	0.335	0.375	0.410
CP4916-54	0.127	0.180	0.255	0.312	0.360	0.402	0.441
CP4916-55	0.133	0.189	0.267	0.326	0.377	0.421	0.462
CP4916-57	0.141	0.200	0.283	0.346	0.400	0.447	0.490
CP4916-59	0.153	0.217	0.306	0.375	0.433	0.484	0.530
CP4916-61	0.165	0.233	0.330	0.404	0.466	0.521	0.571
CP4916-63	0.174	0.246	0.347	0.425	0.491	0.549	0.601
CP4916-65	0.185	0.261	0.369	0.452	0.522	0.584	0.639
CP4916-67	0.196	0.278	0.392	0.481	0.555	0.621	0.680
CP4916-68	0.203	0.287	0.405	0.496	0.573	0.641	0.702
CP4916-70	0.216	0.306	0.433	0.530	0.612	0.684	0.750
CP4916-72	0.226	0.320	0.453	0.554	0.640	0.716	0.784
CP4916-73	0.233	0.330	0.467	0.572	0.660	0.738	0.808
CP4916-75	0.245	0.347	0.491	0.601	0.694	0.776	0.850
CP4916-78	0.272	0.385	0.544	0.667	0.770	0.861	0.943
CP4916-80	0.280	0.397	0.561	0.687	0.793	0.887	0.971
CP4916-81	0.290	0.411	0.581	0.711	0.821	0.918	1.01
CP4916-83	0.317	0.449	0.634	0.777	0.897	1.00	1.10
CP4916-86	0.332	0.470	0.664	0.813	0.939	1.05	1.15
CP4916-89	0.346	0.490	0.693	0.849	0.980	1.10	1.20
CP4916-91	0.369	0.523	0.739	0.905	1.05	1.17	1.28
CP4916-93	0.387	0.547	0.774	0.947	1.09	1.22	1.34
CP4916-95	0.404	0.572	0.808	0.990	1.14	1.28	1.40

	GPM						
	5 PSI	10 PSI	20 PSI	30 PSI	40 PSI	50 PSI	60 PSI
CP4916-98	0.442	0.625	0.884	1.08	1.25	1.40	1.53
CP4916-103	0.461	0.653	0.923	1.13	1.31	1.46	1.60
CP4916-107	0.518	0.733	1.04	1.27	1.47	1.64	1.79
CP4916-110	0.548	0.775	1.10	1.34	1.55	1.73	1.90
CP4916-115	0.605	0.855	1.21	1.48	1.71	1.91	2.09
CP4916-120	0.629	0.890	1.26	1.54	1.78	1.99	2.18
CP4916-125	0.693	0.980	1.39	1.70	1.96	2.19	2.40
CP4916-128	0.721	1.02	1.44	1.77	2.04	2.28	2.50
CP4916-132	0.774	1.10	1.55	1.90	2.19	2.45	2.68
CP4916-136	0.840	1.19	1.68	2.06	2.38	2.66	2.91
CP4916-140	0.894	1.27	1.79	2.19	2.53	2.83	3.10
CP4916-144	0.926	1.31	1.85	2.27	2.62	2.93	3.21
CP4916-147	0.953	1.35	1.91	2.33	2.70	3.01	3.30
CP4916-151	1.04	1.47	2.08	2.55	2.94	3.29	3.60
CP4916-156	1.10	1.55	2.20	2.69	3.11	3.47	3.80
CP4916-161	1.15	1.63	2.31	2.83	3.27	3.65	4.00
CP4916-166	1.21	1.72	2.43	2.97	3.43	3.84	4.20
CP4916-170	1.30	1.84	2.61	3.19	3.69	4.12	4.51
CP4916-172	1.36	1.92	2.71	3.32	3.84	4.29	4.70
CP4916-177	1.41	2.00	2.83	3.46	4.00	4.47	4.90
CP4916-182	1.47	2.08	2.95	3.61	4.17	4.66	5.10
CP4916-187	1.56	2.21	3.12	3.82	4.41	4.93	5.40
CP4916-196	1.73	2.45	3.46	4.24	4.90	5.47	6.00
CP4916-205	1.88	2.65	3.75	4.59	5.31	5.93	6.50
CP4916-218	2.11	2.98	4.21	5.16	5.96	6.66	7.30
CP4916-234	2.45	3.47	4.91	6.01	6.94	7.76	8.50
CP4916-250	2.83	4.00	5.66	6.93	8.00	8.94	9.80

DLQ TONGUE - JACK & HITCH OPTIONS

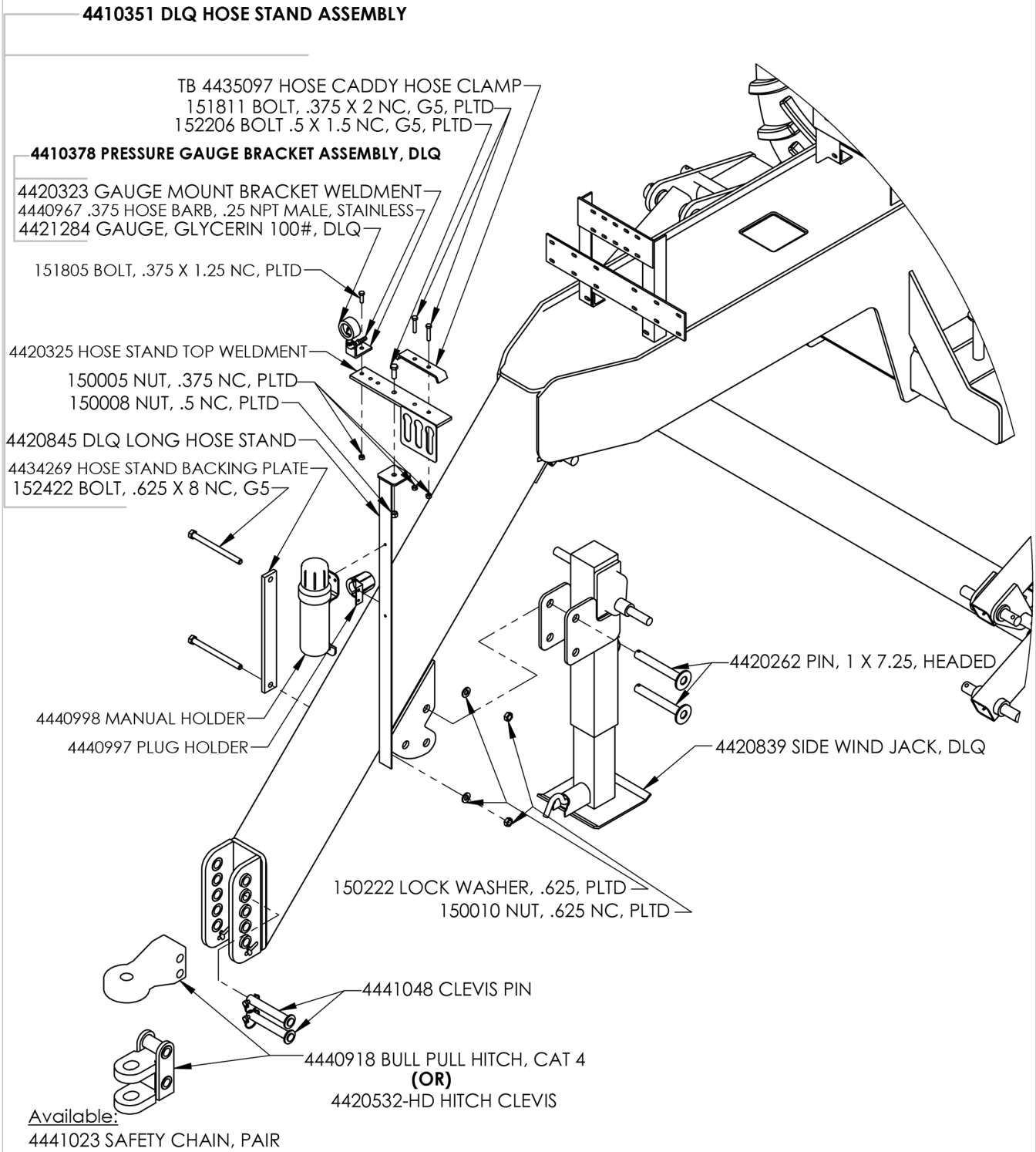

DRAWN BY	RICH SMOTHERS	6/2/2014	Dalton USA AG PRODUCTS www.DaltonAg.com
CHECKED BY			
PRINT DATE	12/19/2022		
CONFIG.	Default		

PROPRIETARY AND CONFIDENTIAL
THE INFORMATION CONTAINED IN THIS DRAWING IS THE SOLE PROPERTY OF DALTON AG. ANY REPRODUCTION IN PART OR AS A WHOLE WITHOUT THE WRITTEN PERMISSION OF DALTON AG IS PROHIBITED.

COMMENTS:

DWG: DLQ TONGUE - JACK AND HITCH OPTIONS

SIZE	SHEET TITLE:	REV
A	Sheet1	A

SCALE: 1:16 | SHEET 1 OF 1

DLQ HD TOOLBAR CONTROL ARM

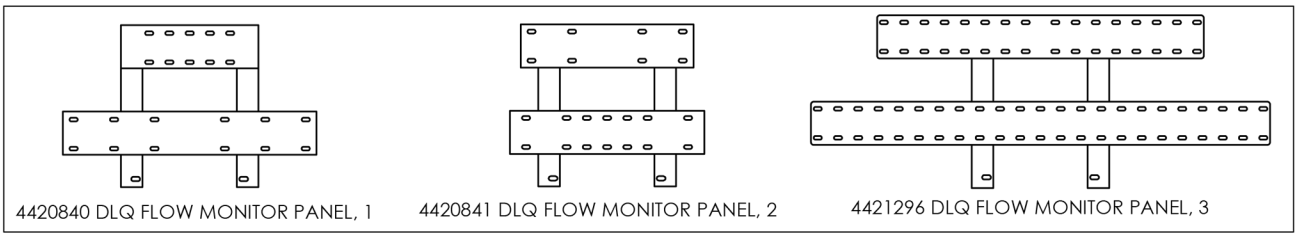

RAVEN SHUTOFF MOUNTING OPTIONS

4420842 RAVEN VALVE MOUNT, 3 SHUT-OFF

(OR)

4420917 RAVEN VALVE MOUNT, 5 SHUT-OFF

VISIFLO GAGE MOUNTING OPTIONS

4420840 DLQ FLOW MONITOR PANEL, 1 (SHOWN)
(OR)
4420841 DLQ FLOW MONITOR PANEL, 2
(OR)
4421296 DLQ FLOW MONITOR PANEL, 3

(SEE ABOVE FOR VISUAL REPRESENTATION)

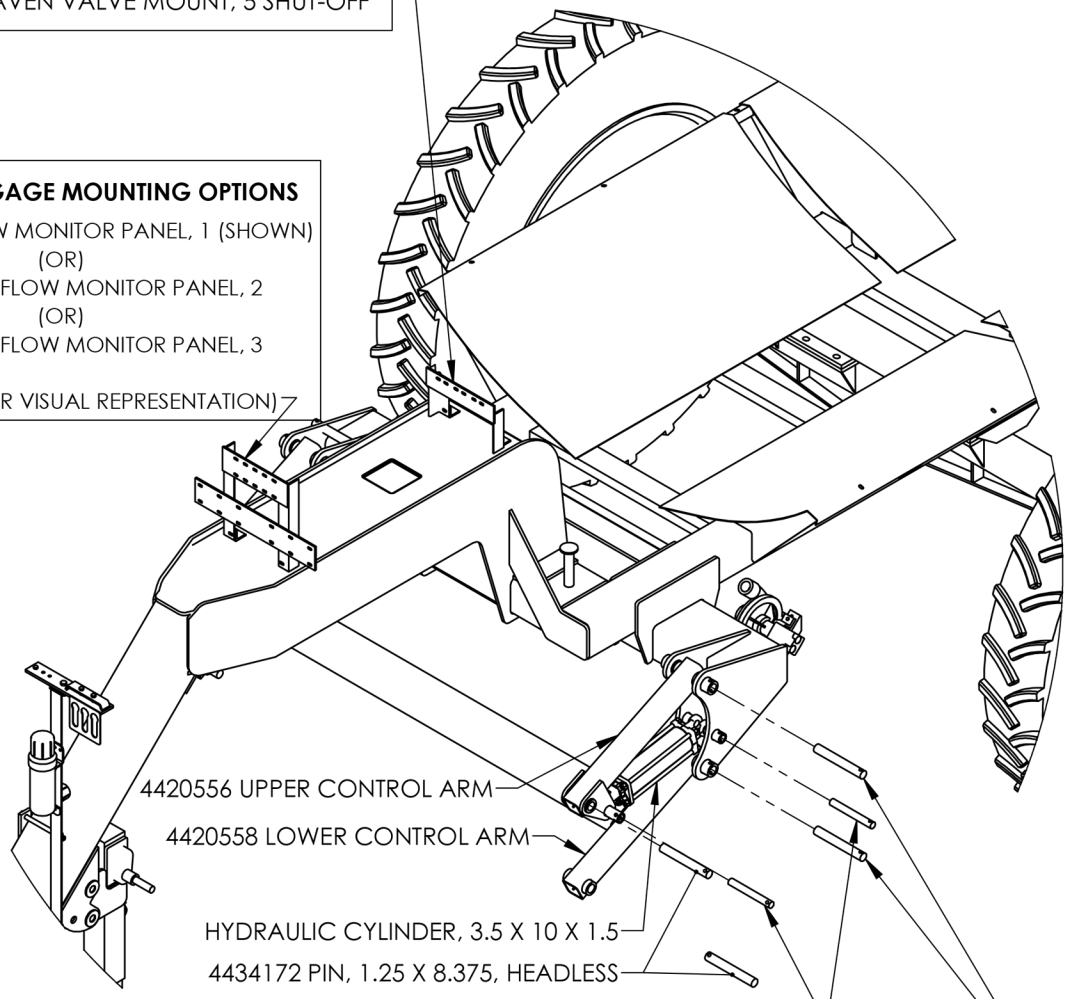

TB 4410231-10, CYLINDER LOCKUP
WITH 640028 SAFETY PIN

DRAWN BY	RICH SMOTHERS	6/2/2014
CHECKED BY		
PRINT DATE	12/16/2022	
CONFIG.	Default	

Dalton USA AG PRODUCTS
www.DaltonAg.com

PROPRIETARY AND CONFIDENTIAL
THE INFORMATION CONTAINED IN THIS DRAWING IS THE SOLE PROPERTY OF DALTON AG. ANY REPRODUCTION IN PART OR AS A WHOLE WITHOUT THE WRITTEN PERMISSION OF DALTON AG IS PROHIBITED.

COMMENTS:

DWG: DLQ HD TOOLBAR CONTROL ARM

SIZE **A** | SHEET TITLE: Sheet1 | REV A

SCALE: 1:18 | SHEET 1 OF 1

DLQSTD AXLE, SPINDLE, AND HUB

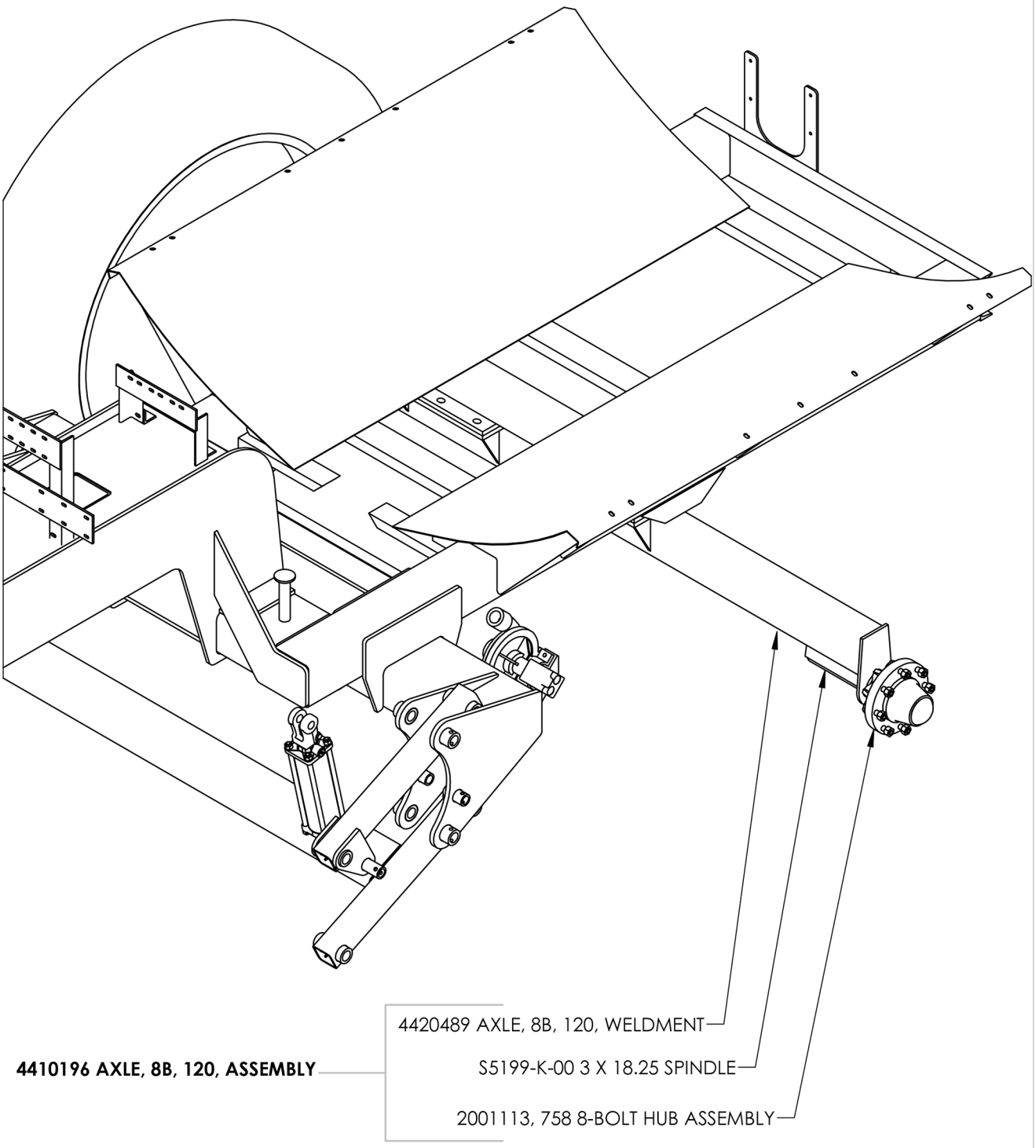

DRAWN BY	RICH SMOTHERS	9/18/2015	
CHECKED BY			
PRINT DATE	12/16/2022		
CONFIG.	Default		

Dalton USA AG PRODUCTS
www.DaltonAg.com

PROPRIETARY AND CONFIDENTIAL
THE INFORMATION CONTAINED IN THIS DRAWING IS THE SOLE PROPERTY OF DALTON AG. ANY REPRODUCTION IN PART OR AS A WHOLE WITHOUT THE WRITTEN PERMISSION OF DALTON AG IS PROHIBITED.

COMMENTS:

DWG: DLQSTD AXLE, SPINDLE, AND HUB

SIZE	SHEET TITLE:	REV
A	Sheet1	A

SCALE: 1:16 | SHEET 1 OF 1

1002194, 81908-BOLT HUB ASSEMBLY, COMPLETE

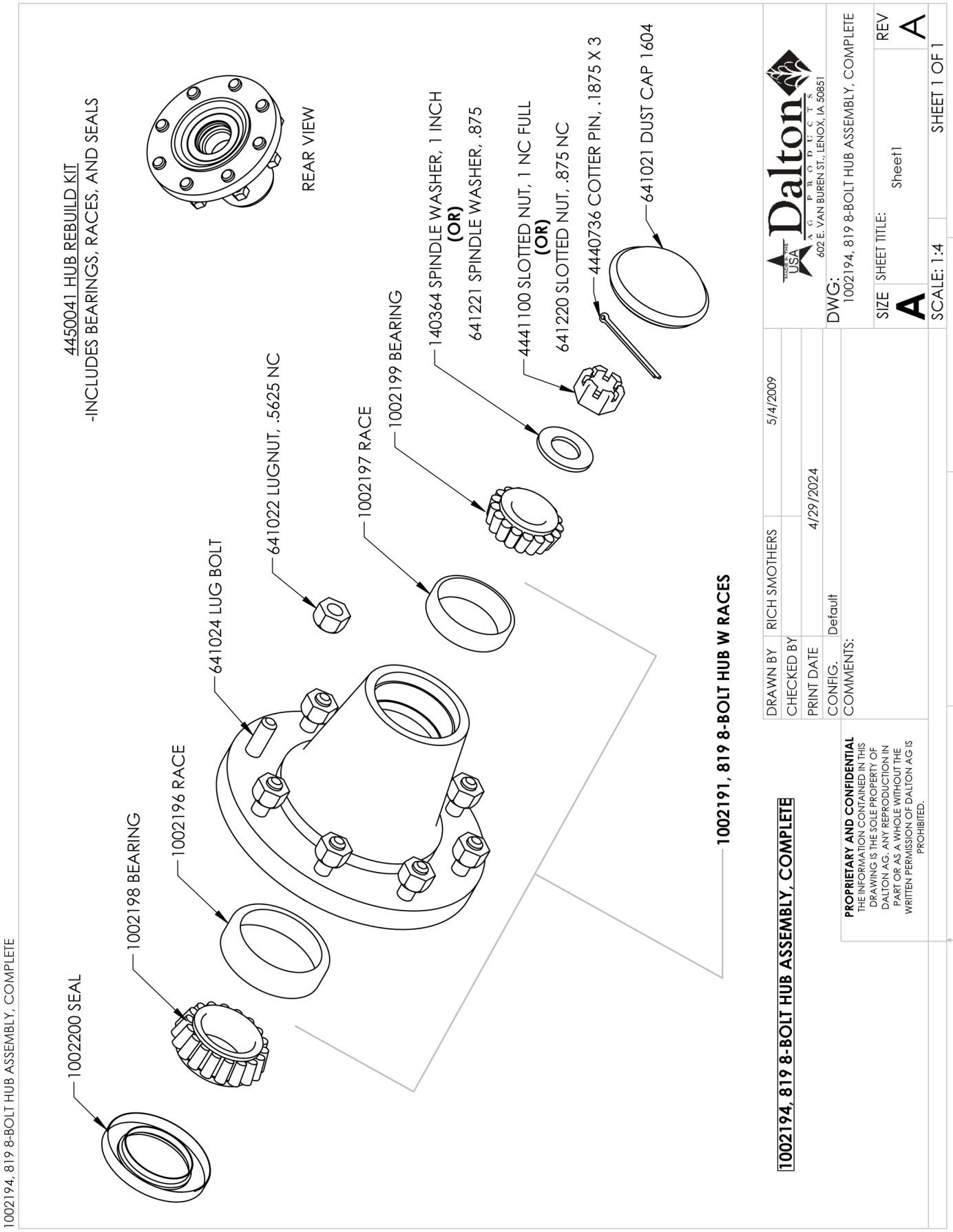

DLQHD AXLE, SPINDLE, AND HUB

(EXCLUDING DLQHD 2000)

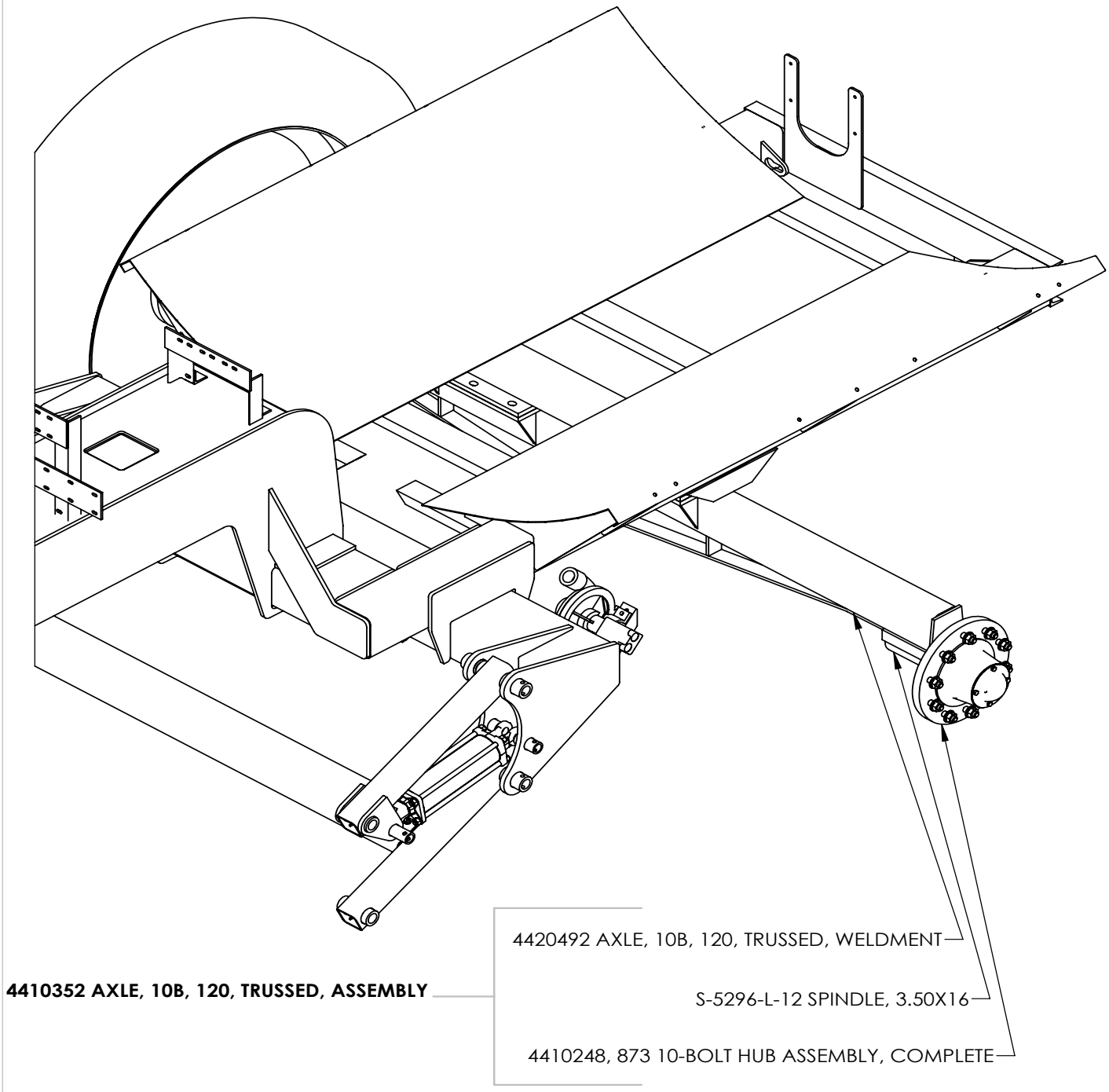

DRAWN BY	RICH SMOTHERS	1/21/2015	
CHECKED BY			
PRINT DATE	3/17/2017		
CONFIG.	Default		
COMMENTS:			

Dalton AG PRODUCTS
www.DaltonAg.com

DWG: DLQHD AXLE, SPINDLE, AND HUB

SIZE A | SHEET TITLE: Sheet1 | REV A

SCALE: 1:16 | SHEET 1 OF 1

PROPRIETARY AND CONFIDENTIAL
THE INFORMATION CONTAINED IN THIS DRAWING IS THE SOLE PROPERTY OF DALTON AG. ANY REPRODUCTION IN PART OR AS A WHOLE WITHOUT THE WRITTEN PERMISSION OF DALTON AG IS PROHIBITED.

4410248, 873 10-BOLT HUB ASSEMBLY, COMPLETE

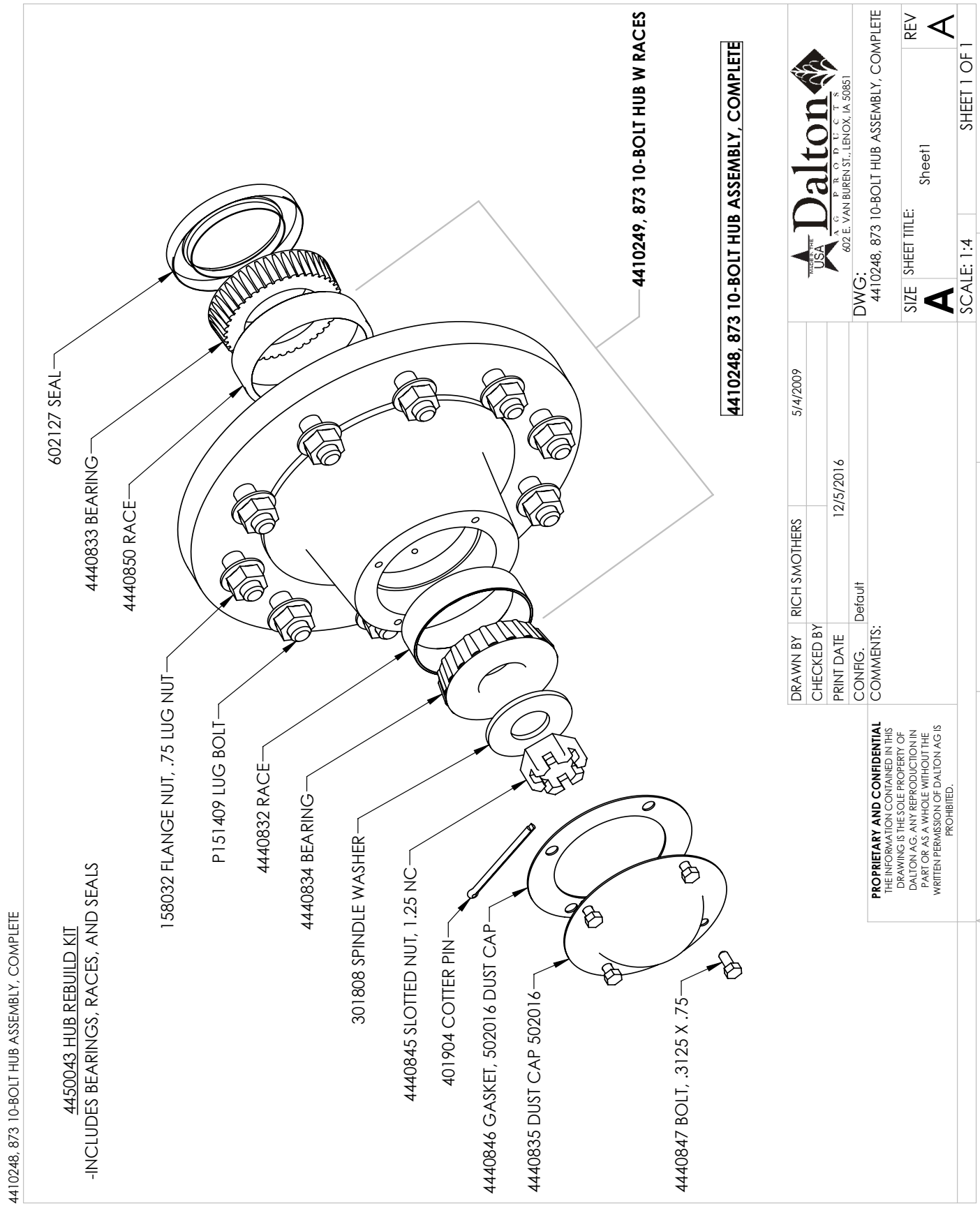

DLQHD 2000 AXLE, SPINDLE, AND HUB

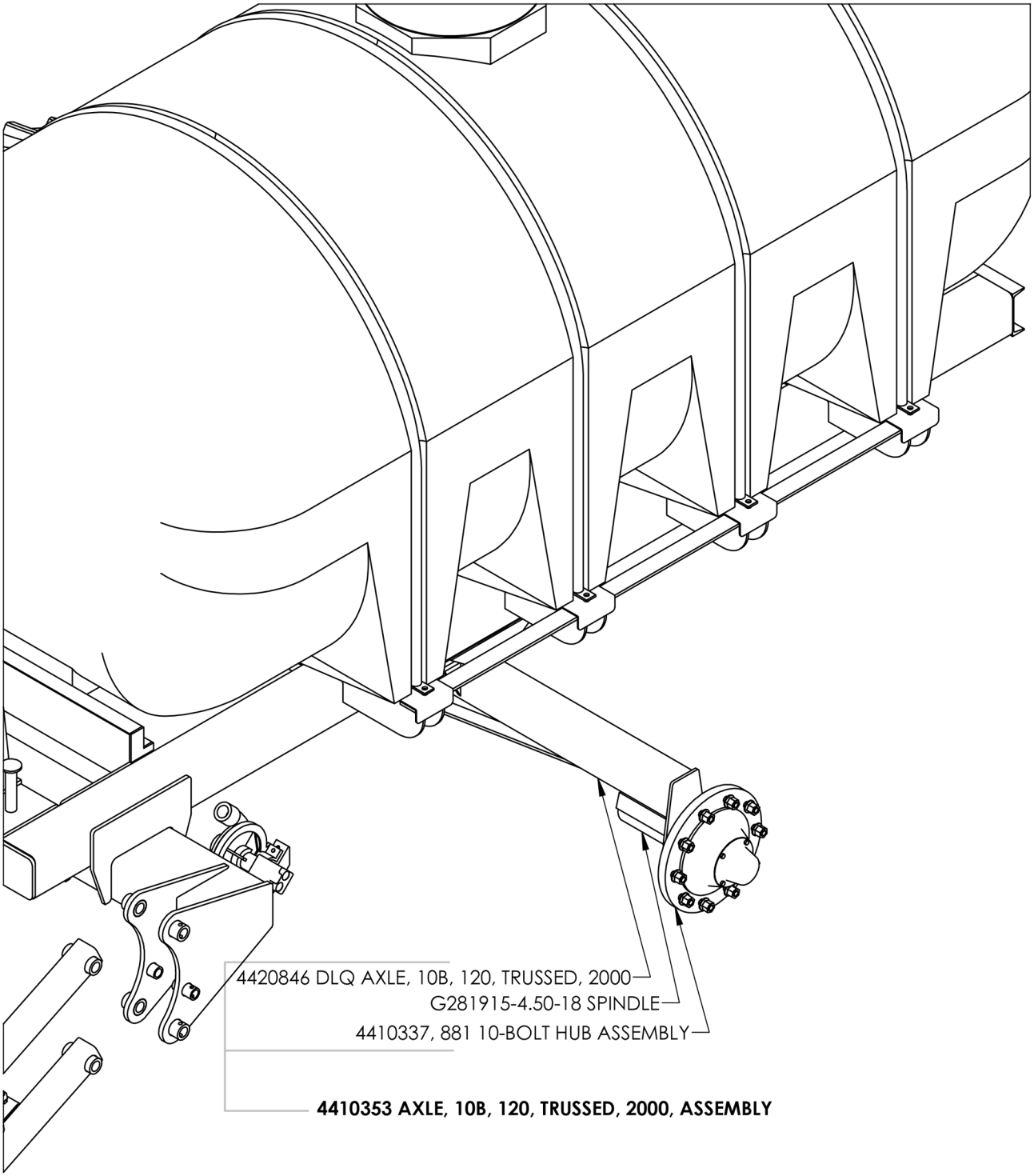

DRAWN BY	RICH SMOTHERS	6/2/2014	Dalton AG PRODUCTS www.DaltonAg.com
CHECKED BY			
PRINT DATE	12/16/2022		
CONFIG.	Default		
COMMENTS:			DWG: DLQHD 2000 AXLE, SPINDLE, AND HUB
			SIZE A / SHEET TITLE: Sheet1 / REV A
			SCALE: 1:16 / SHEET 1 OF 1

PROPRIETARY AND CONFIDENTIAL
THE INFORMATION CONTAINED IN THIS DRAWING IS THE SOLE PROPERTY OF DALTON AG. ANY REPRODUCTION IN PART OR AS A WHOLE WITHOUT THE WRITTEN PERMISSION OF DALTON AG IS PROHIBITED.

4410337, 881 10-BOLT HUB ASSEMBLY, COMPLETE

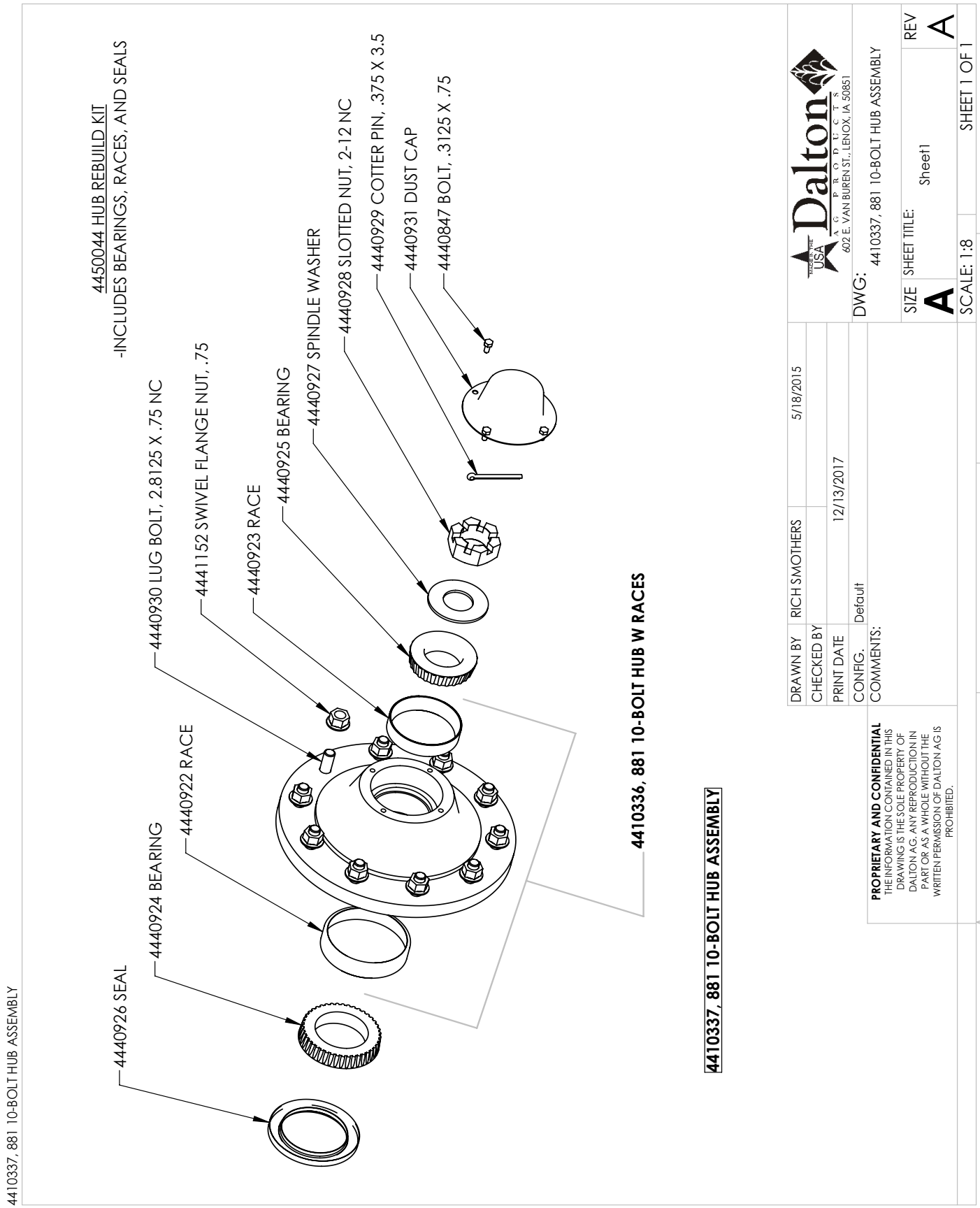

AXLE ASSEMBLY

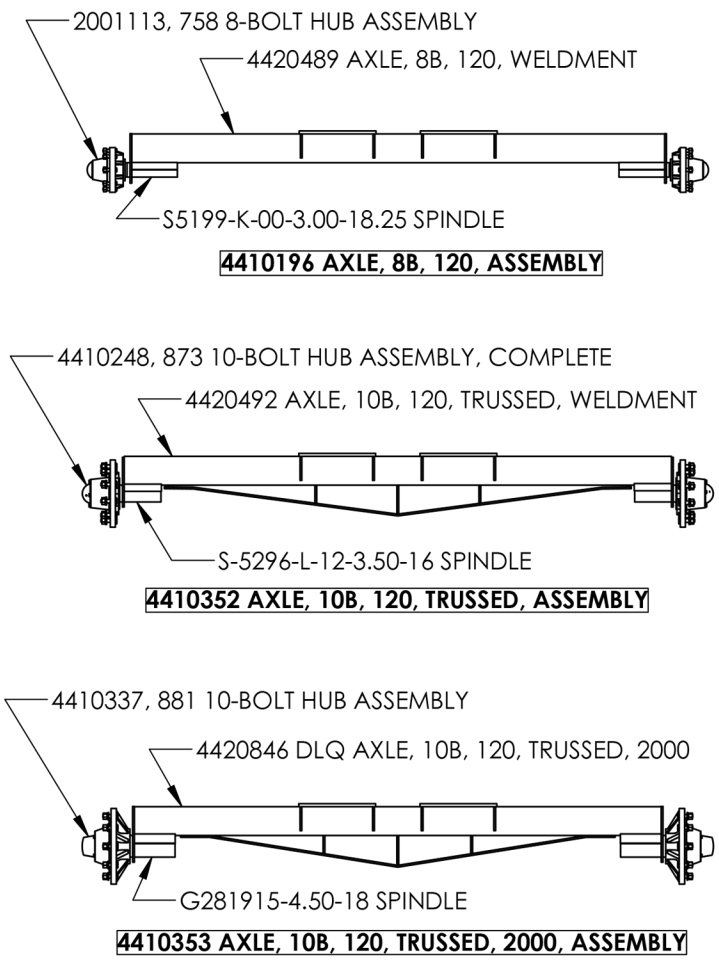

DLQ

DLQHD

DLQHD 2000

DRAWN BY	RICH SMOTHERS	12/27/2013	
CHECKED BY			
PRINT DATE	2/7/2023		
CONFIG.	4410196 AXLE, 8B, 120, ASSEMBLY		

MADE IN THE USA Dalton AG PRODUCTS
www.DaltonAg.com

PROPRIETARY AND CONFIDENTIAL
THE INFORMATION CONTAINED IN THIS DRAWING IS THE SOLE PROPERTY OF DALTON AG. ANY REPRODUCTION IN PART OR AS A WHOLE WITHOUT THE WRITTEN PERMISSION OF DALTON AG IS PROHIBITED.

COMMENTS:

DWG: DLQ AXLE SHEET

SIZE **A** | SHEET TITLE: Sheet1 | REV A

FOR PARTS, CALL 1.800.342.7498

SCALE: 1:36 | SHEET 1 OF 1

DLQ SINGLE LIFT TOOLBAR

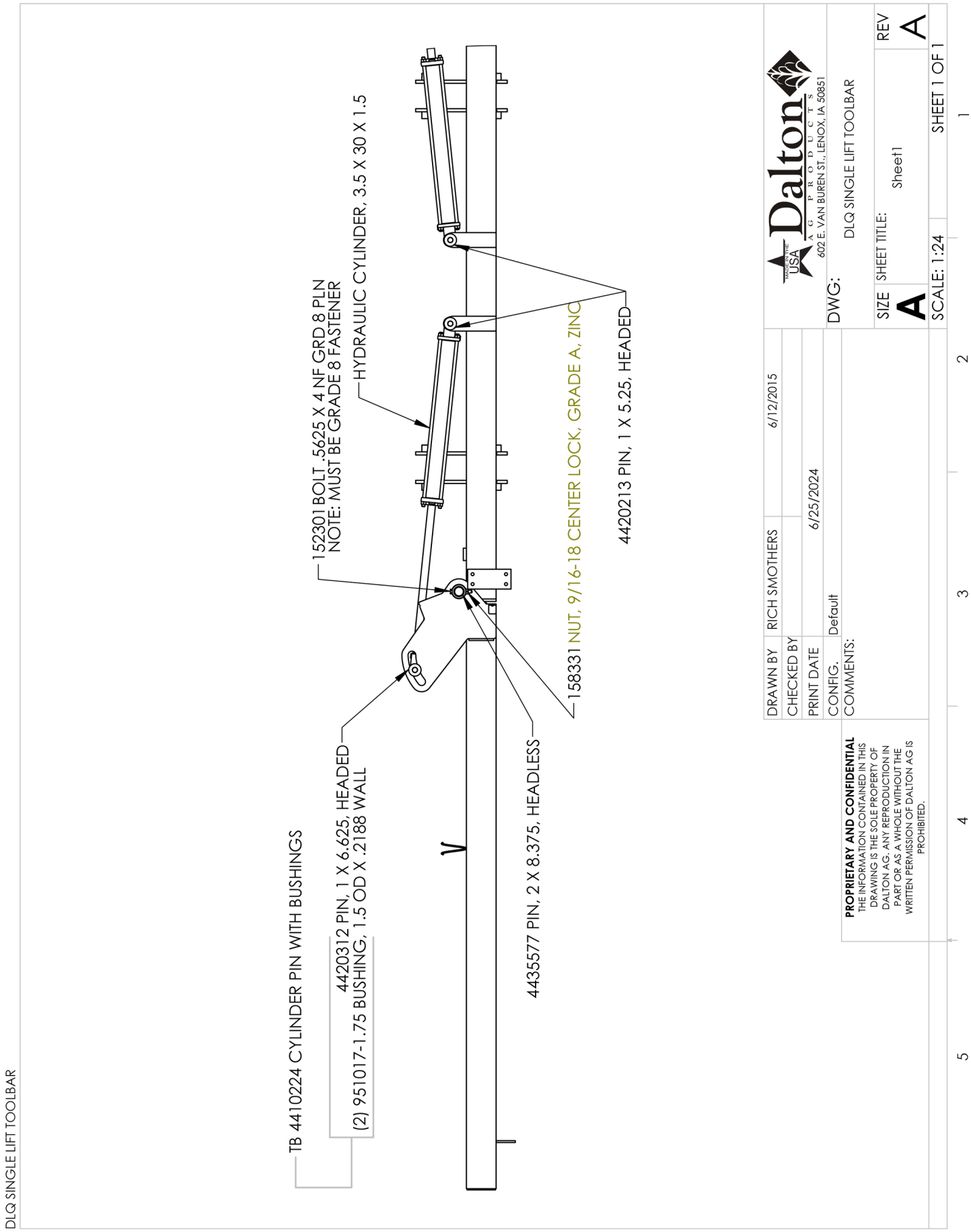

DLQ FRONT FOLD TOOLBAR

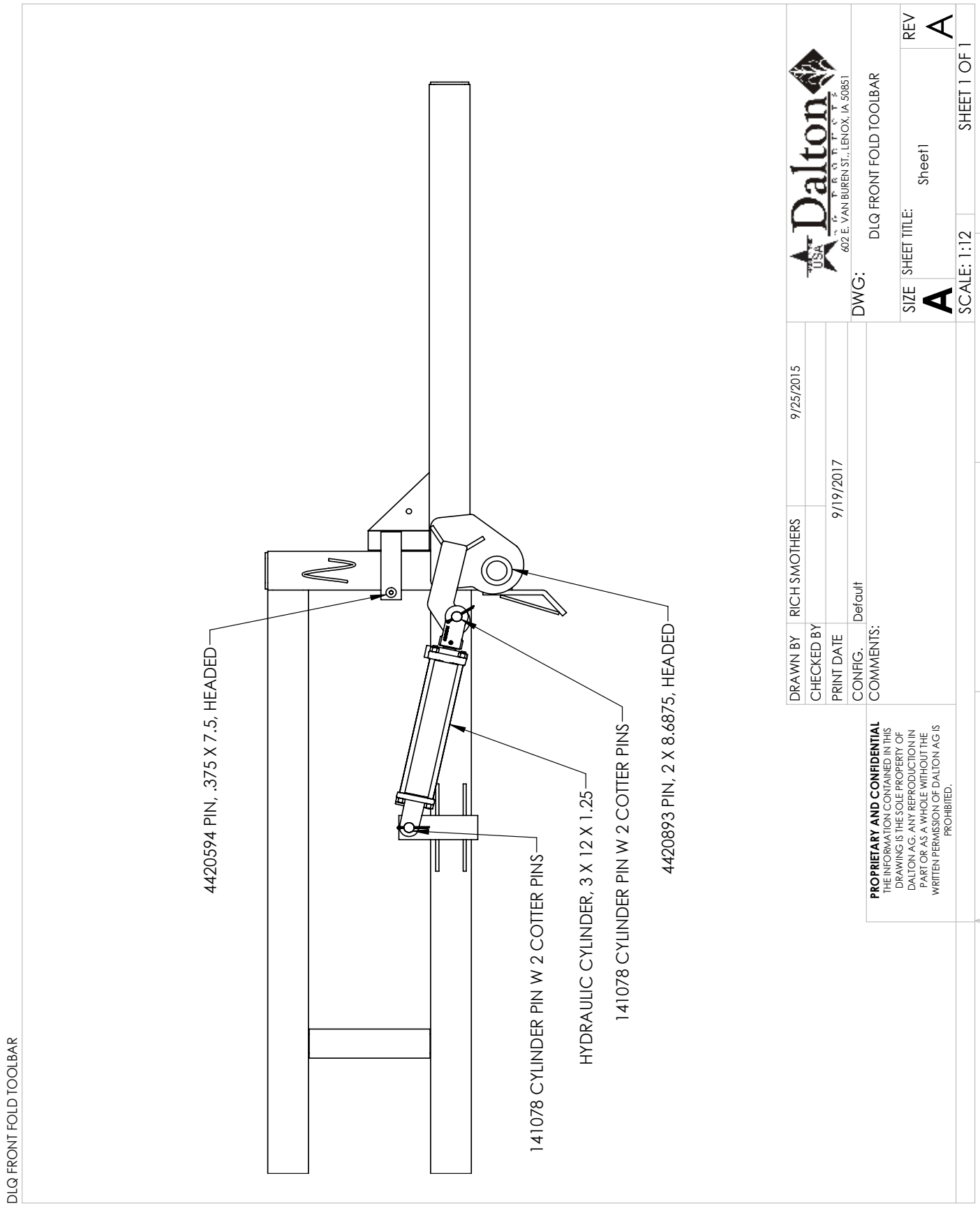

DLQ DOUBLE LIFT TOOLBAR

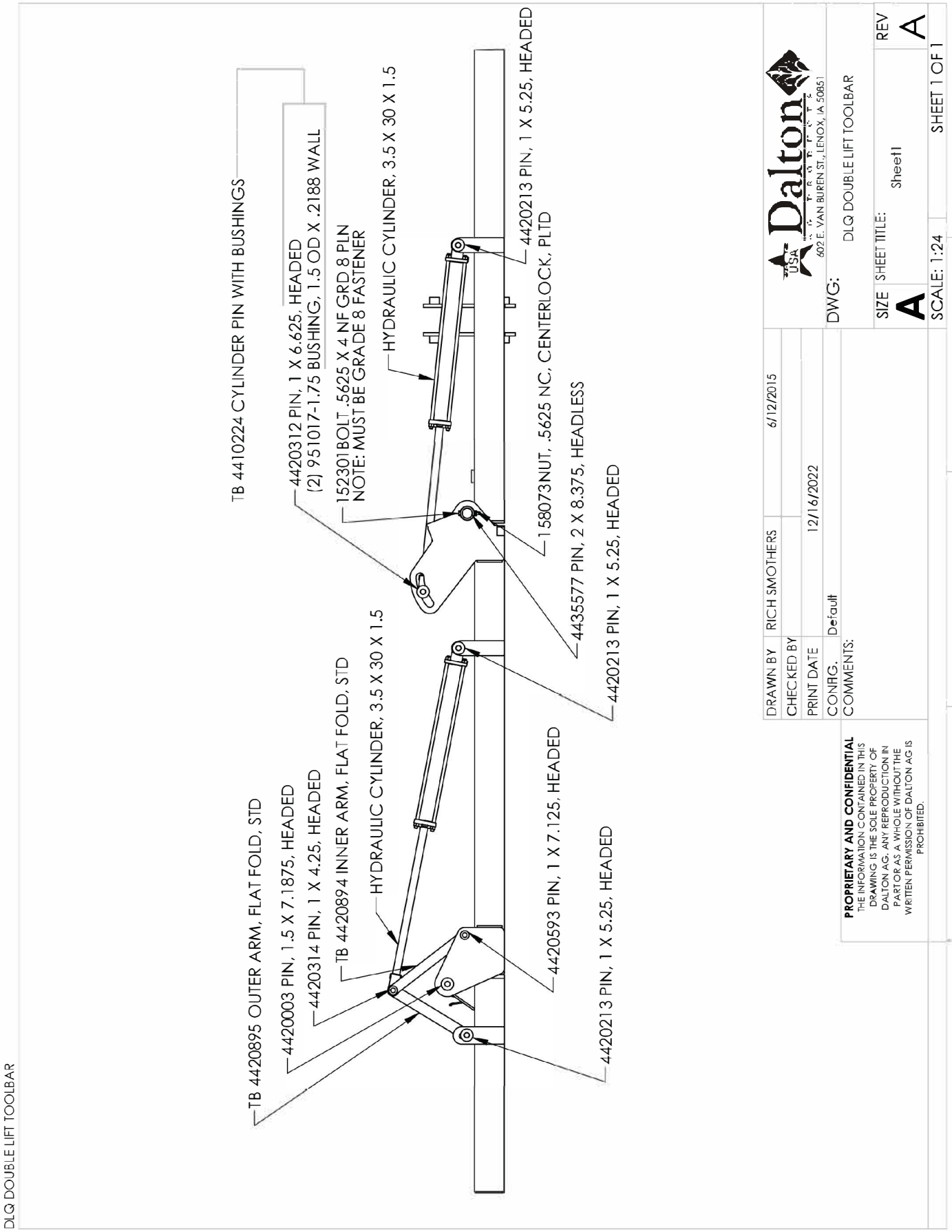

DLQHD 60’ TOOLBAR

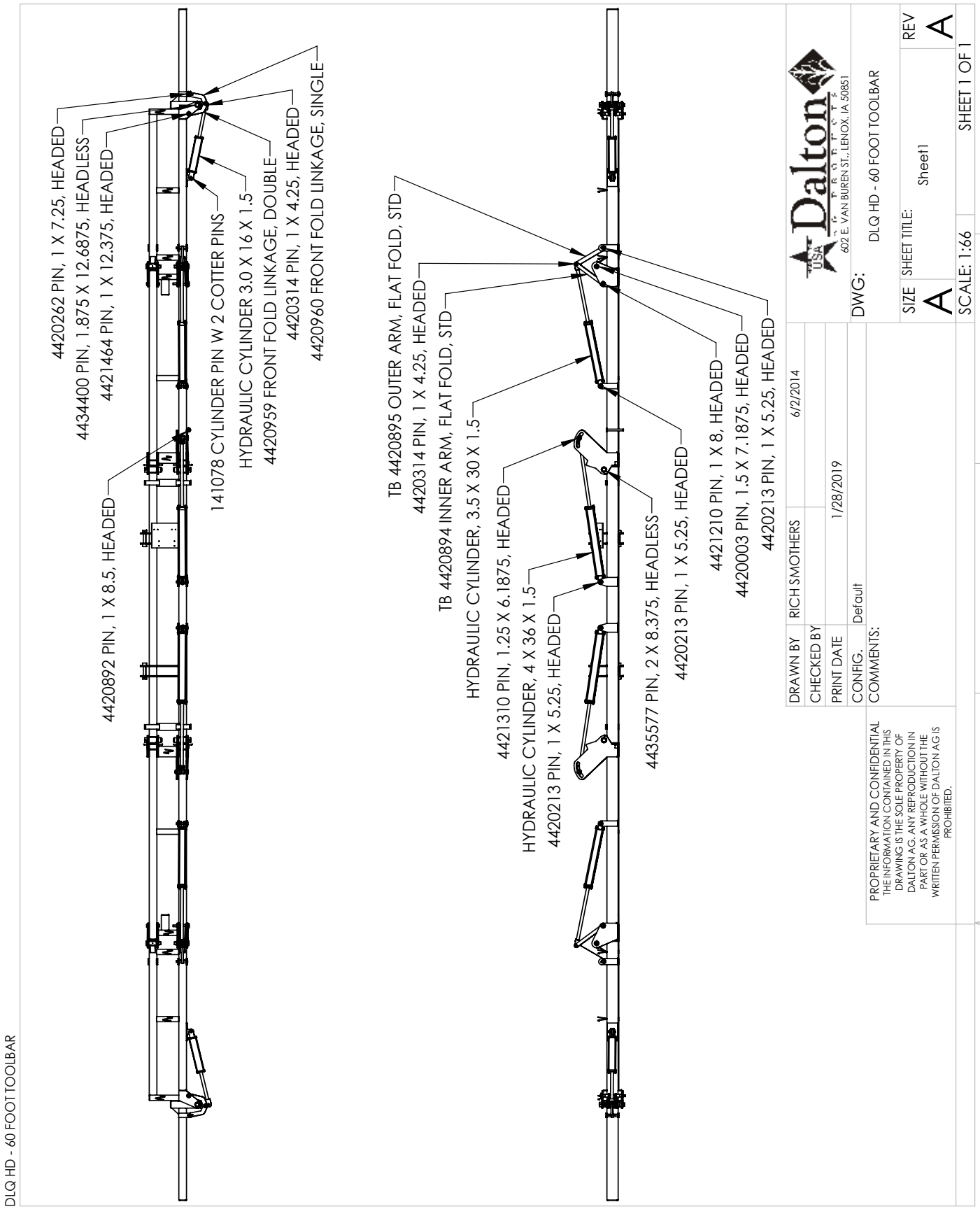

TOOLBAR CYLINDER STOP

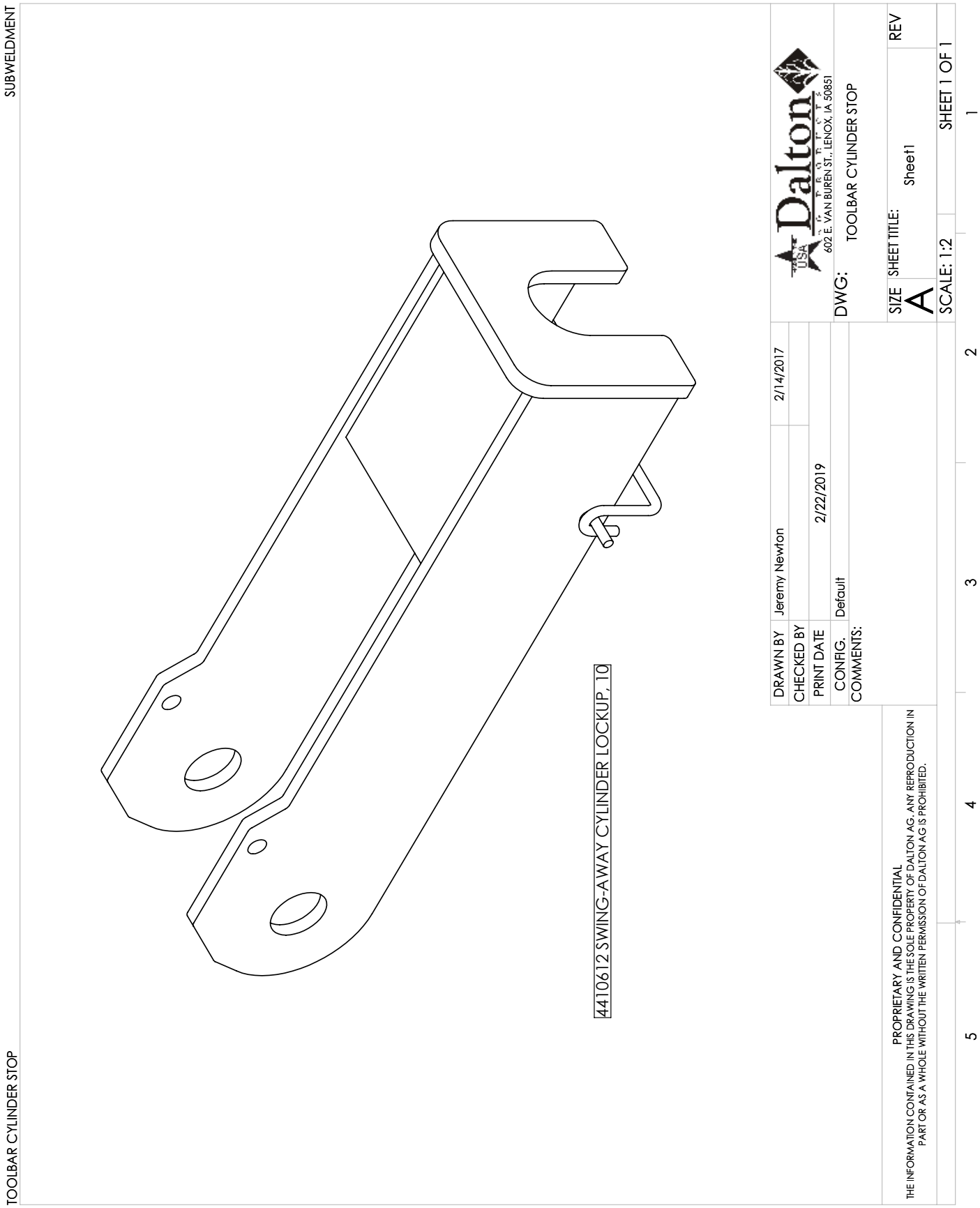

DLQ LIGHT KIT

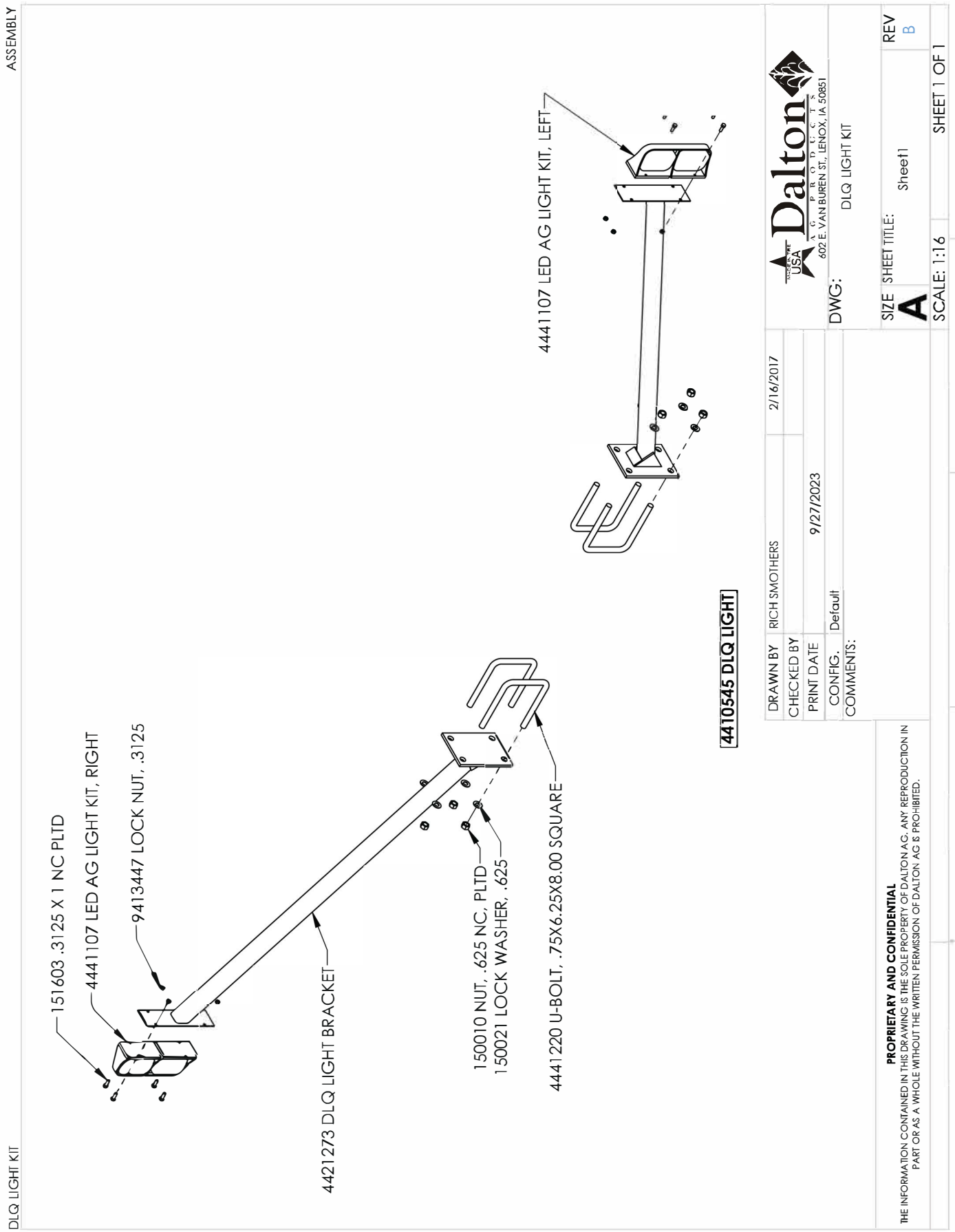

DLQHD 60' DOWNPRESSURE

ITEM NO.	PART NUMBER	DESCRIPTION	QTY.
1	4435577	PIN, 2 X 8.438, HEADLESS	2
2	4421310	PIN, 1.25 X 6.1875, HEADED	1
3	4434378	DLQ PIN LINKAGE, HD	2
4	4420920	DLQ LINKAGE PIN	1
5	951044-1.5	TUBE 1.50 X 12 GA WALL	2
6	158014	ROLL PIN, .375 X 2.5	2
7	4434304	DLQ PIN LINKAGE WASHER	1
8	2001119	WASHER, SAE FLAT, 1.25 PLATED	1

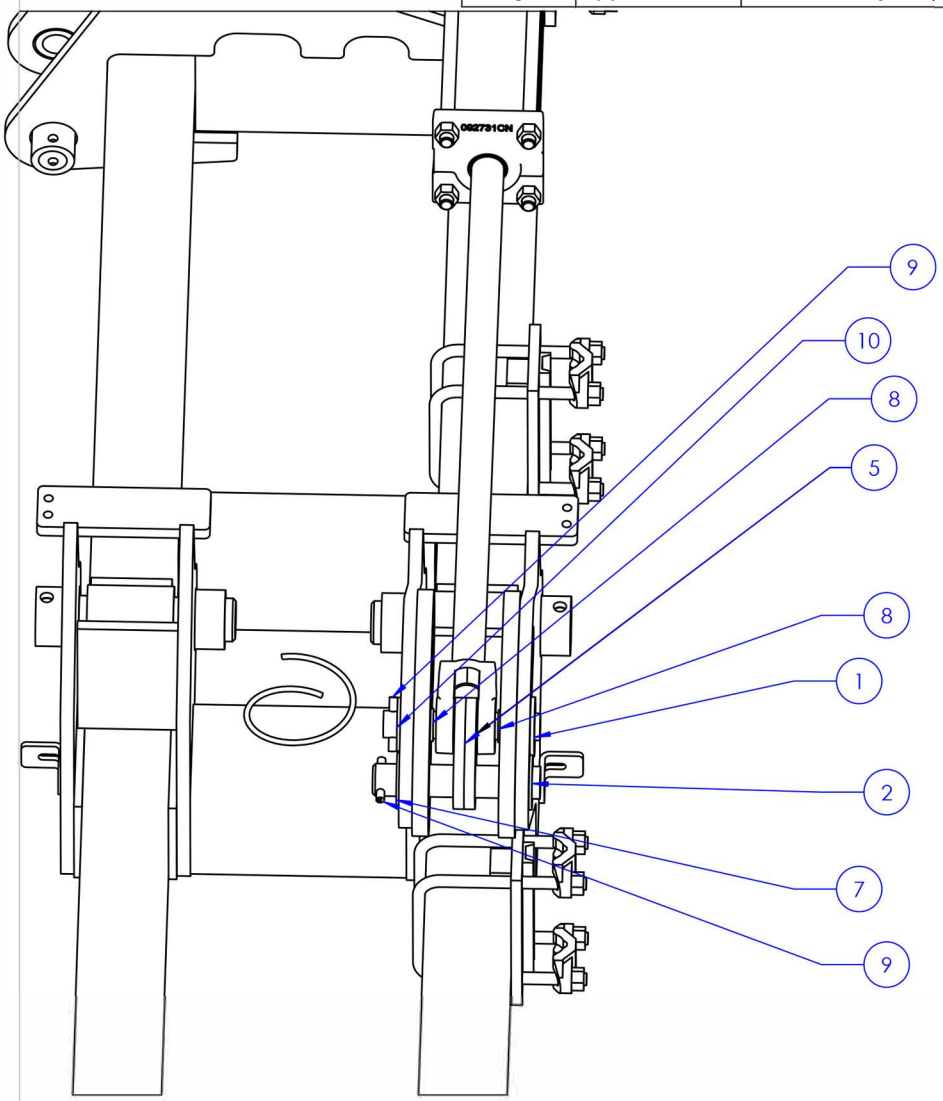

DLQ HD - 60 FOOT DOWNPRESSURE

DRAWN BY	RICH SMOTHERS	6/12/2015
CHECKED BY		
PRINT DATE	4/29/2024	
CONFIG.	Default	

COMMENTS:

PROPRIETARY AND CONFIDENTIAL
THE INFORMATION CONTAINED IN THIS DRAWING IS THE SOLE PROPERTY OF DALTON AG. ANY REPRODUCTION IN PART OR AS A WHOLE WITHOUT THE WRITTEN PERMISSION OF DALTON AG IS PROHIBITED.

Dalton AG PRODUCTS
MADE IN THE USA
www.DaltonAg.com

DWG: DLQ HD - 60 FOOT DOWNPRESSURE

SIZE A | SHEET TITLE: Sheet1 | REV A

FOR PARTS, CALL 1.800.342.7498

SCALE: 1:8 | SHEET 1 OF 1

DLQ DOWNPRESSURE KIT

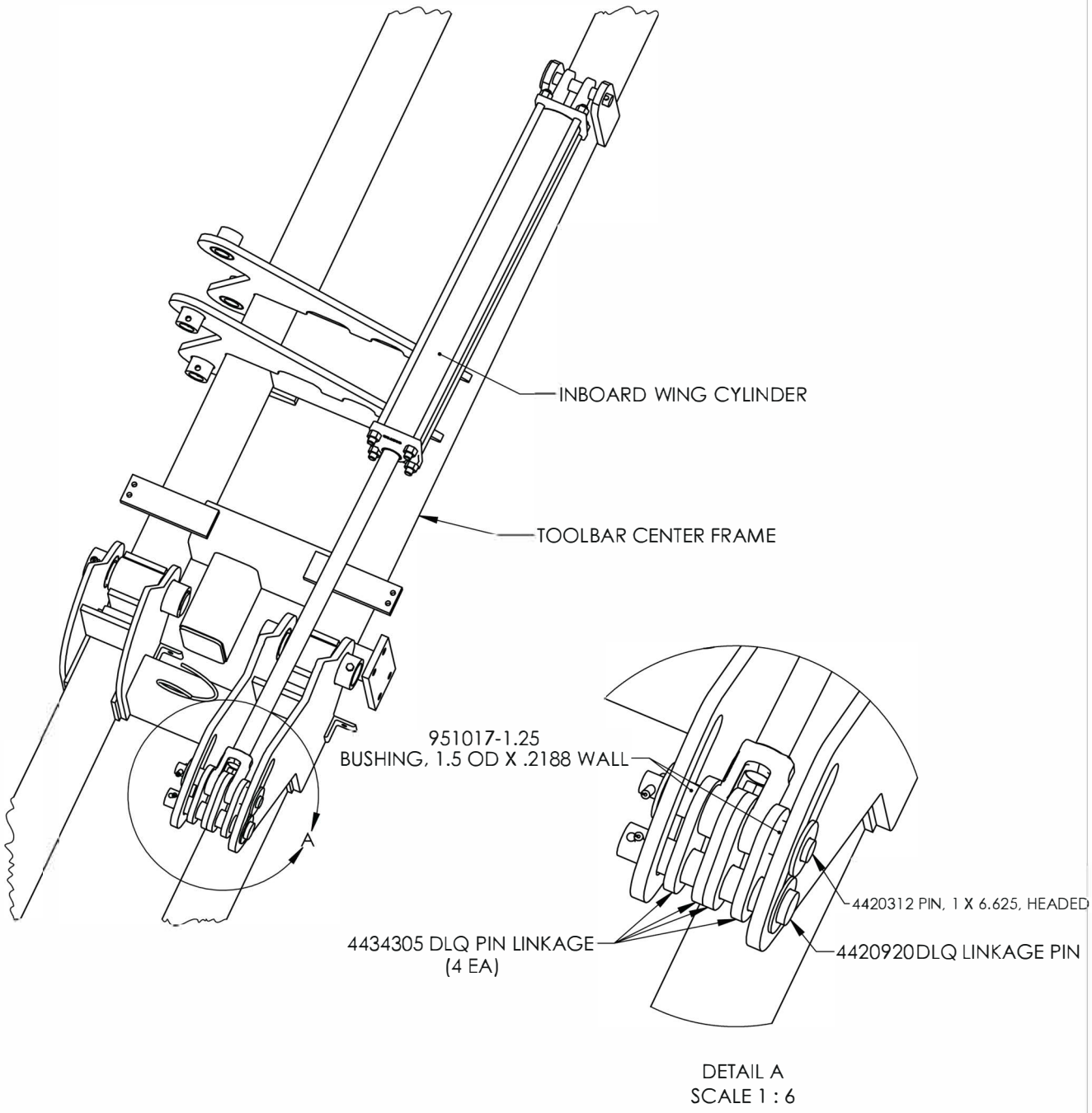

DLQ DOWNPRESSURE KIT

DRAWN BY	RICH SMOTHERS	6/12/2015	
CHECKED BY			
PRINT DATE	12/16/2022		
CONFIG.	Default		
COMMENTS:			

Dalton USA AG PRODUCTS
www.DaltonAg.com

DWG: DLQ DOWNPRESSURE KIT

SIZE A | SHEET TITLE: Sheet1 | REV A

SCALE: 1:96 | SHEET 1 OF 1

PROPRIETARY AND CONFIDENTIAL
THE INFORMATION CONTAINED IN THIS DRAWING IS THE SOLE PROPERTY OF DALTON AG. ANY REPRODUCTION IN PART OR AS A WHOLE WITHOUT THE WRITTEN PERMISSION OF DALTON AG IS PROHIBITED.

DLQ DOWNPRESSURE MOUNT & HARDWARE

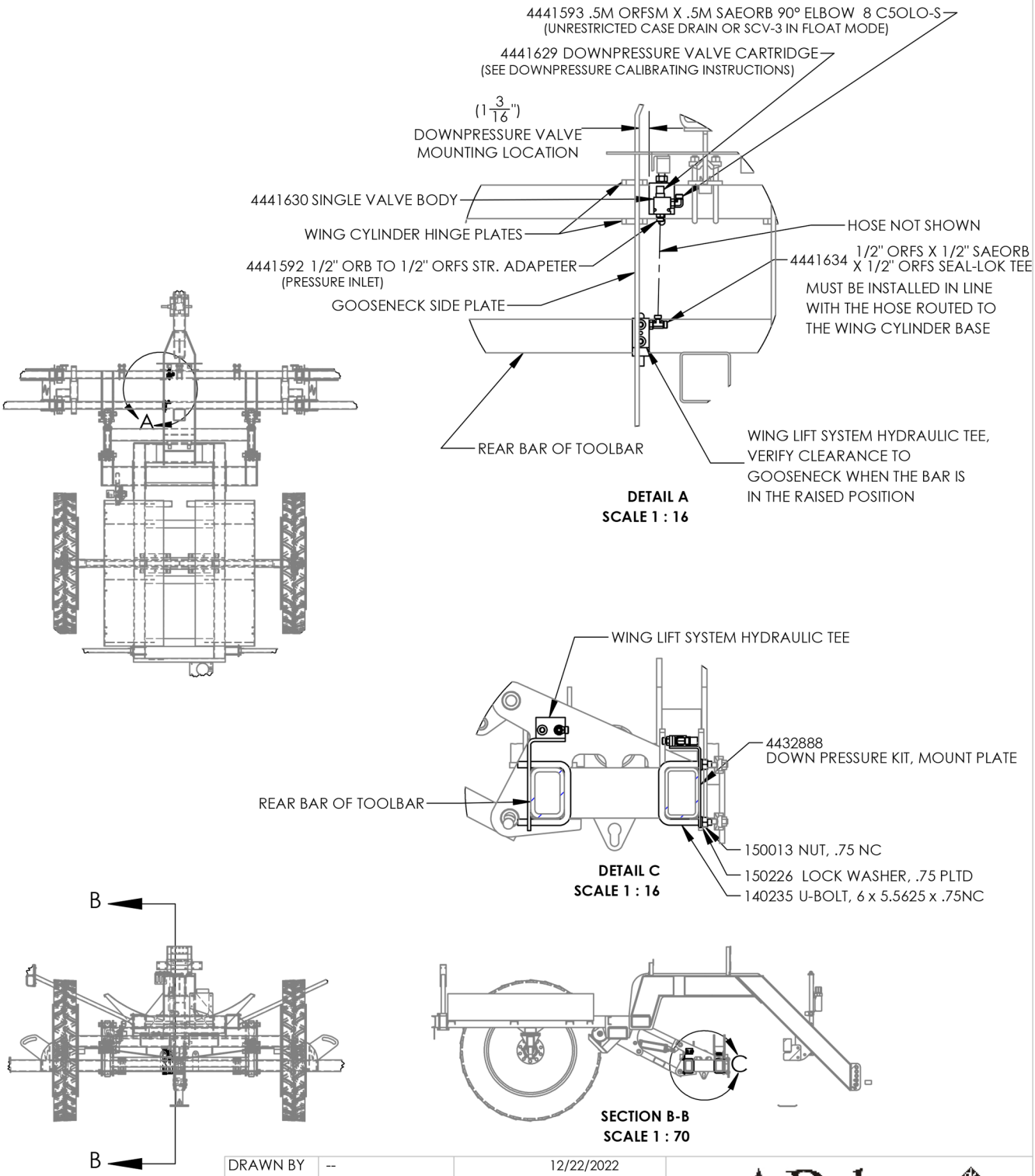

DRAWN BY	--	12/22/2022
CHECKED BY		
PRINT DATE	1/16/2023	
CONFIG.	Default	

Dalton USA AG PRODUCTS
www.DaltonAg.com

PROPRIETARY AND CONFIDENTIAL
THE INFORMATION CONTAINED IN THIS DRAWING IS THE SOLE PROPERTY OF DALTON AG. ANY REPRODUCTION IN PART OR AS A WHOLE WITHOUT THE WRITTEN PERMISSION OF DALTON AG IS PROHIBITED.

COMMENTS:

DWG: DLQ DOWNPRESSURE MOUNT AND HARDWARE

SIZE	SHEET TITLE:	REV
A	Sheet1	A

FOR PARTS, CALL 1.800.342.7498

SCALE: 1:192 | SHEET 1 OF 2

DOWNPRESSURE CALIBRATION INSTRUCTIONS

NOTE: THIS PROCEDURE IS ONLY REQUIRED IF YOU PURCHASE THE DOWNPRESSURE FUNCTION AS AN UPGRADE TO AN EXISTING MACHINE OR YOU ARE DOING A FIELD REPLACEMENT OF THE DOWNPRESSURE VALVE. ANY DOWNPRESSURE SYSTEM THAT IS SHIPPED FROM DALTON AG INSTALLED ON A LIQUID APPLICATOR TOOLBAR WILL BE CALIBRATED AT DALTON AG PRIOR TO SHIPPING.

*FOR THE DOWNPRESSURE FUNCTION TO OPERATE PROPERLY, THE HYDRAULIC SYSTEM MUST BE CALIBRATED TO OPERATE AT 500 PSI WHILE THE DOWNPRESSURE FUNCTION IN ACTIVATED. INCORRECT CALIBRATION COULD RESULT IN LOSS/REDUCED FUNCTIONALITY OR DAMAGE TO THE MACHINE.

1. UNIT NEEDS TO BE IN FIELD READY POSITION.
2. ATTACH A PRESSURE GAUGE BY TAPPING INTO THE HYDRAULIC LINE THAT CONNECTS THE WING CYLINDER BASE PORTS.
3. SET SCV VALVE FOR WING CYLINDERS TO OPEN/EXTEND THE WINGS.
4. ADJUST 4441629 DOWNPRESSURE VALVE CARTRIDGE, TO 500 PSI MAX READOUT ON THE PRESSURE GAUGE. REMEMBER TO LOCK THE VALVE WHEN FINISHED SO IT DOES NOT LOSE IT'S CALIBRATION.

DRAWN BY	RICH SMOTHERS	12/22/2022	
CHECKED BY			
PRINT DATE	1/16/2023		
CONFIG.	Default		

Dalton USA AG PRODUCTS
www.DaltonAg.com

PROPRIETARY AND CONFIDENTIAL
THE INFORMATION CONTAINED IN THIS DRAWING IS THE SOLE PROPERTY OF DALTON AG. ANY REPRODUCTION IN PART OR AS A WHOLE WITHOUT THE WRITTEN PERMISSION OF DALTON AG IS PROHIBITED.

COMMENTS:

DWG: DLQ DOWNPRESSURE MOUNT AND HARDWARE

SIZE	SHEET TITLE:	REV
A	Sheet2	A

FOR PARTS, CALL 1.800.342.7498

SCALE: 1:192 | SHEET 2 OF 2

CENTER SECTION HINGE CONFIGURATIONS

DOUBLE RANK CENTER SECTION HINGE CONFIGURATION: WITH AND WITHOUT GULLWING APPLICATION

"WITHOUT GULLWING" APPLICATION: ADJUST THE FASTENER COMPONENTS SHOWN BELOW TO ACHIEVE LEVEL/PARALLEL RELATIONSHIP BETWEEN CENTER SECTION AND THE WINGS (DETAIL A).

"WITH GULLWING" APPLICATION: CUSTOMER CAN REMOVE THE FASTENER COMPONENTS SHOWN BELOW, WHICH WILL ALLOW THE TOOLBAR TO ARTICULATE DOWNWARD.

NOTE: ALL LIQUID APPLICATORS WILL BE SHIPPED WITH THE HARDWARE INSTALLED AS SHOWN BELOW, CUSTOMER TO REMOVE HARDWARE AT THEIR DISCRETION (GULLWING APPLICATION ONLY).

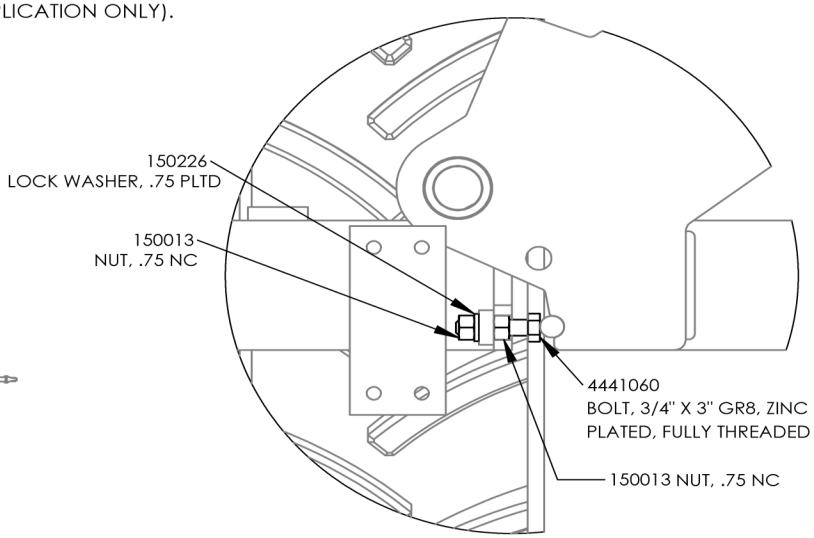

DETAIL A
SCALE 1 : 8

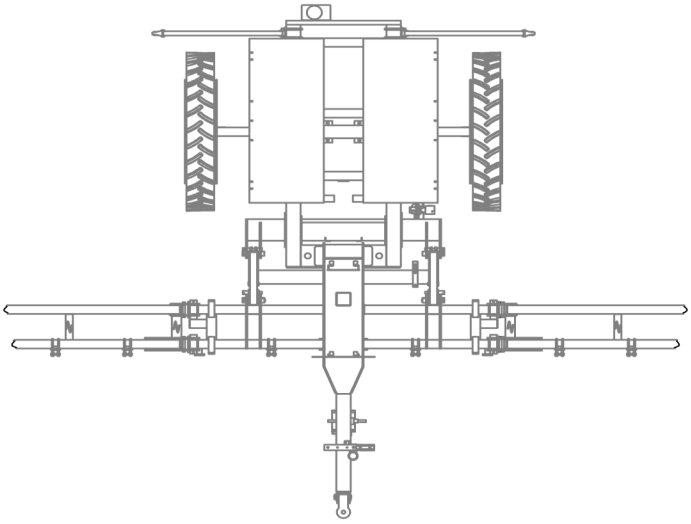

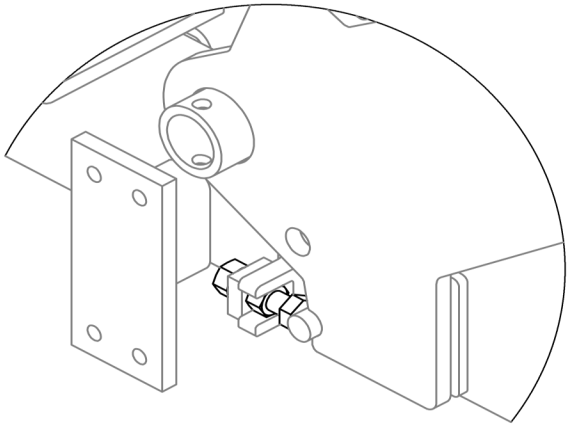

DETAIL A (ISO)
SCALE 1 : 6

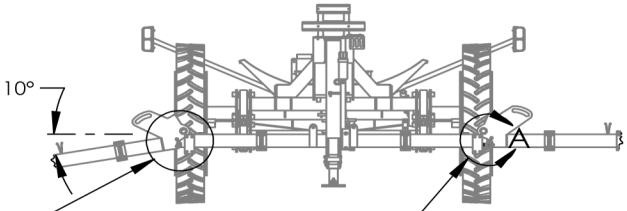

GULLWING CONFIGURATION:
NO HARDWARE IN THIS LOCATION, ALLOWING THE WING TO ARTICULATE DOWNWARD.

WITHOUT GULLWING CONFIGURATION:
HARDWARE IN THIS LOCATION, ALLOWING THE WING TO BE ADJUSTED PARALLEL TO THE CENTER SECTION (DETAIL A).

DRAWN BY	--	12/22/2022
CHECKED BY		
PRINT DATE	5/7/2025	
CONFIG.	Default	

Dalton AG PRODUCTS USA
www.DaltonAg.com

PROPRIETARY AND CONFIDENTIAL
THE INFORMATION CONTAINED IN THIS DRAWING IS THE SOLE PROPERTY OF DALTON AG. ANY REPRODUCTION IN PART OR AS A WHOLE WITHOUT THE WRITTEN PERMISSION OF DALTON AG IS PROHIBITED.

COMMENTS:

DWG: CENTER SECTION HINGE CONFIGURATIONS

SIZE	SHEET TITLE:	REV
A	DOUBLE RANK	A

FOR PARTS, CALL 1.800.342.7498

SCALE: 1:192 | SHEET 1 OF 2

CENTER SECTION HINGE CONFIGURATIONS CONT.

SINGLE RANK CENTER SECTION HINGE CONFIGURATION: WITH AND WITHOUT GULLWING APPLICATION

"WITHOUT GULLWING" APPLICATION: INSTALL THE FASTENER COMPONENTS SHOWN BELOW TO ACHIEVE LEVEL/PARALLEL RELATIONSHIP BETWEEN CENTER SECTION AND THE WINGS (DETAIL B).

"WITH GULLWING" APPLICATION: CUSTOMER CAN REMOVE THE FASTENER COMPONENTS SHOWN BELOW, WHICH WILL ALLOW THE TOOLBAR TO ARTICULATE DOWNWARD.

NOTE: ALL LIQUID APPLICATORS WILL BE SHIPPED WITH THE HARDWARE INSTALLED AS SHOWN BELOW, CUSTOMER TO REMOVE HARDWARE AT THEIR DISCRETION (GULLWING APPLICATION ONLY).

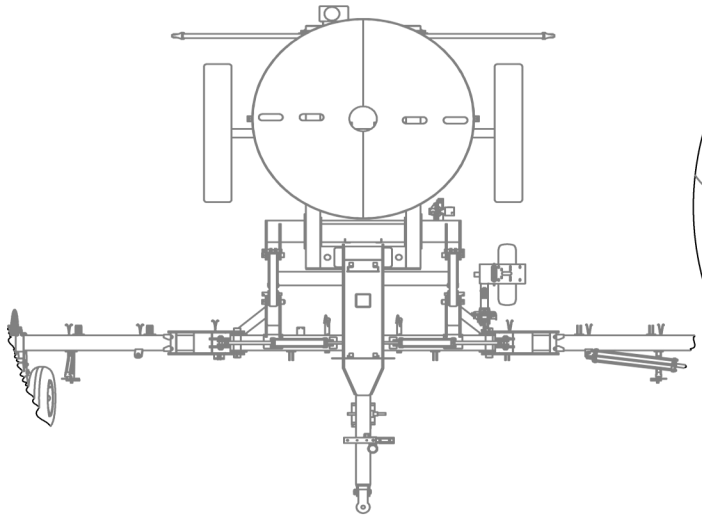

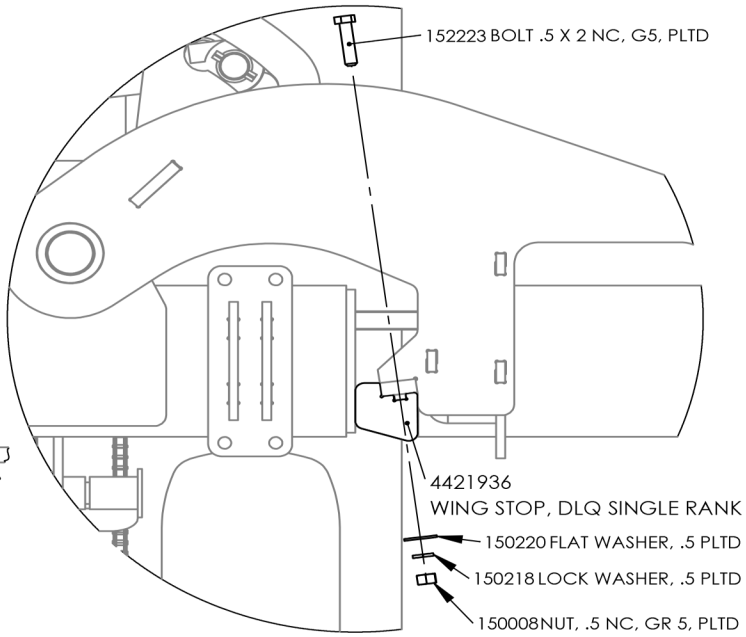

DETAIL B
SCALE 1 : 8

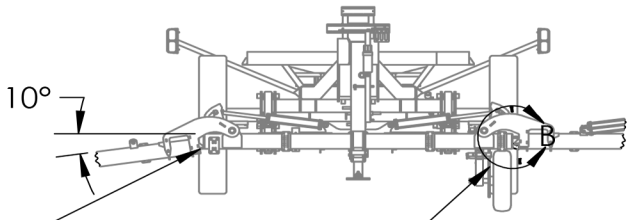

GULLWING CONFIGURATION: NO HARDWARE IN THIS LOCATION, ALLOWING THE WING TO ARTICULATE DOWNWARD.

WITHOUT GULLWING CONFIGURATION: HARDWARE IN THIS LOCATION, HOLDING THE WING TO PARALLEL TO THE CENTER SECTION (DETAIL B).

DRAWN BY	RICH SMOTHERS	12/22/2022
CHECKED BY		
PRINT DATE	5/7/2025	
CONFIG.	Default	
COMMENTS:		

Dalton AG PRODUCTS USA
www.DaltonAg.com

PROPRIETARY AND CONFIDENTIAL
THE INFORMATION CONTAINED IN THIS DRAWING IS THE SOLE PROPERTY OF DALTON AG. ANY REPRODUCTION IN PART OR AS A WHOLE WITHOUT THE WRITTEN PERMISSION OF DALTON AG IS PROHIBITED.

DWG: CENTER SECTION HINGE CONFIGURATIONS

SIZE	SHEET TITLE:	REV
A	SINGLE RANK	A

FOR PARTS, CALL 1.800.342.7498

SCALE: 1:192 | SHEET 2 OF 2

DLQ GULLWING MOUNT & HARDWARE

NOTE: GULL WING HYDRAULIC CONTROL BLOCK SHOWN WITHOUT VALVES AND FITTINGS

PORT LABEL	DESCRIPTION	NOTES
P-IB	SCV-1 PRESSURE	TO TRACTOR
P-T	SCV-1 RETURN	TO TRACTOR
P-OB	SCV-2 PRESSURE	TO TRACTOR
P-FF	SCV-2 RETURN	TO TRACTOR
TANK	UNRESTRICTED CASE DRAIN OR SCV-3 IN FLOAT MODE	TO TRACTOR
TL-RR	TOOLBAR LIFT RIGHT ROD	
TL-RB	TOOLBAR LIFT RIGHT BASE	
TL-LR	TOOLBAR LIFT LEFT ROD	
TL-LB	TOOLBAR LIFT LEFT BASE	
IB-RR	INBOARD RIGHT ROD	
IB-RB	INBOARD RIGHT BASE	
IB-LR	INBOARD LEFT ROD	
IB-LB	INBOARD LEFT BASE	
OB-RR	OUTBOARD RIGHT ROD	PLUGGED IF NO OUTBOARD CYLINDERS
OB-RB	OUTBOARD RIGHT BASE	PLUGGED IF NO OUTBOARD CYLINDERS
OB-LR	OUTBOARD LEFT ROD	PLUGGED IF NO OUTBOARD CYLINDERS
OB-LB	OUTBOARD LEFT BASE	PLUGGED IF NO OUTBOARD CYLINDERS
FF-RR	FRONT FOLD RIGHT ROD	PLUGGED IF NO FRONT FOLD CYLINDERS
FF-RB	FRONT FOLD RIGHT BASE	PLUGGED IF NO FRONT FOLD CYLINDERS
FF-LR	FRONT FOLD LEFT ROD	PLUGGED IF NO FRONT FOLD CYLINDERS
FF-LB	FRONT FOLD LEFT BASE	PLUGGED IF NO FRONT FOLD CYLINDERS

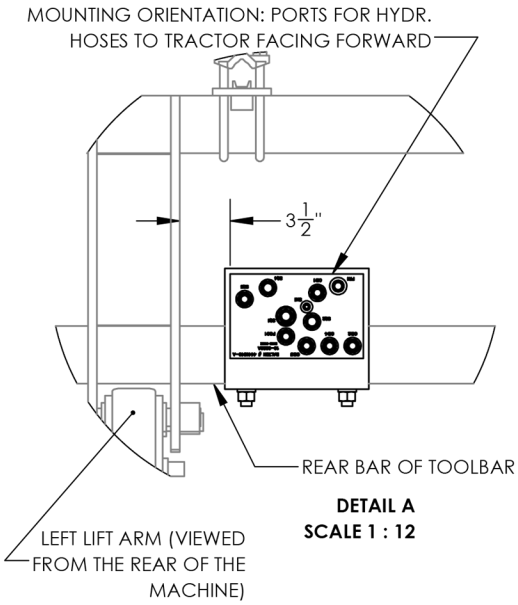

DETAIL A
SCALE 1 : 12

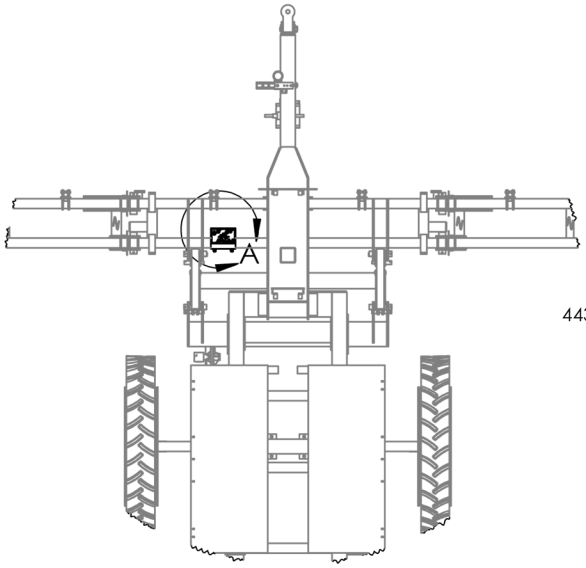

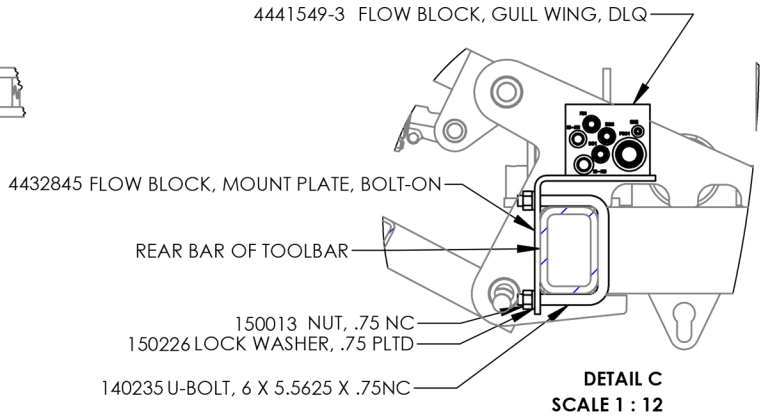

DETAIL C
SCALE 1 : 12

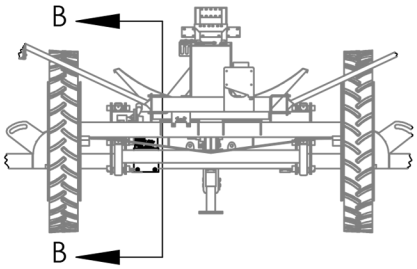

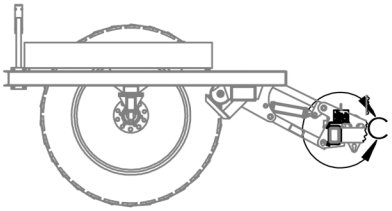

SECTION B-B
SCALE 1 : 70

DRAWN BY	--	12/22/2022
CHECKED BY		
PRINT DATE	1/16/2023	
CONFIG.	Default	

Dalton AG PRODUCTS USA
www.DaltonAg.com

PROPRIETARY AND CONFIDENTIAL
THE INFORMATION CONTAINED IN THIS DRAWING IS THE SOLE PROPERTY OF DALTON AG. ANY REPRODUCTION IN PART OR AS A WHOLE WITHOUT THE WRITTEN PERMISSION OF DALTON AG IS PROHIBITED.

COMMENTS:

DWG: DLQ GULLWING MOUNT AND HARDWARE

SIZE **A** | SHEET TITLE: Sheet1 | REV A

FOR PARTS, CALL 1.800.342.7498

SCALE: 1:192 | SHEET 1 OF 2

GULL WING OPERATING INSTRUCTIONS

*FOR THE PASSIVE DOWNFORCE TO BE ACTIVATED THE SCV'S NEED TO BE IN THE REQUIRED POSITIONS.
*FAILURE TO PROPERLY SET THE SCVS WILL ACTIVATE THE SYSTEM AT FULL PRESSURE AND MAY DAMAGE THE INBOARD CYLINDERS OR THE MACHINE MAY NOT OPERATE AS INTENDED.
*RECOMMENDED HYDRAULIC FLOW FOR SCV #1 AND SCV#2 IS 4-6 GPM. MORE FLOW WILL CAUSE THE CYLINDERS TO ACTIVATE TOO FAST AND MAY CAUSE DAMAGE TO THE MACHINE.

HOSE CONNECTIONS:

FLOW BLOCK PORT	*SCV*
P-IB	SCV-1 PRESSURE
P-T	SCV-1 RETURN
P-OB	SCV-2 PRESSURE
P-FF	SCV-2 RETURN
T	UNRESTRICTED CASE DRAIN OR SCV-3 IN FLOAT MODE

TO ACTIVATE THE PASSIVE DOWNFORCE FUNCTION:

- SCV-1 NEEDS TO BE IN THE FLOAT POSITION.
- SCV-2 PRESSURE NEEDS TO BE IN DETENT OR CONSTANT FLOW

***FAILURE TO HAVE SCV-1, SCV-2, AND SCV-3/CASE DRAIN IN THE PROPER SETTINGS DURING OPERATION MAY DAMAGE THE INBOARD CYLINDERS AND CAUSE THE MACHINE TO NOT OPERATE PROPERLY.

GULL WING DOWNPRESSURE CALIBRATION INSTRUCTIONS

NOTE: THIS PROCEDURE IS ONLY REQUIRED IF YOU PURCHASE THE GULL WING FUNCTION AS AN UPGRADE TO AN EXISTING MACHINE OR YOU ARE DOING A FIELD REPLACEMENT OF THE FLOW BLOCK. ANY FLOW BLOCK THAT IS SHIPPED FROM DALTON AG INSTALLED ON A LIQUID APPLICATOR TOOLBAR WILL BE CALIBRATED AT DALTON AG PRIOR TO SHIPPING.

*FOR THE DOWNPRESSURE FUNCTION TO OPERATE PROPERLY, THE HYDRAULIC SYSTEM MUST BE CALIBRATED TO OPERATE AT 500 PSI WHILE THE DOWNPRESSURE FUNCTION IN ACTIVATED. INCORRECT CALIBRATION COULD RESULT IN LOSS/REDUCED FUNCTIONALITY OR DAMAGE TO THE MACHINE.

1. UNIT NEEDS TO BE IN FIELD READY POSITION.
2. ATTACH A PRESSURE GAUGE AT PORT GBW. REQUIRES A -4 37° JIC FLARE FITTING.
3. SET SCV-1 IN 'FLOAT'.
4. SET SCV-2 IN 'DETENT' FOR CONSTANT FLOW.
5. ADJUST PRESSURE REDUCING/RELIEVING VALVE PRH081S-30N, LOCATED ON TOP OF THE MANIFOLD AT PORT 'PR1', TO 500 PSI READOUT ON THE PRESSURE GAUGE. REMEMBER TO LOCK THE VALVE WHEN FINISHED SO IT DOES NOT LOSE IT'S CALIBRATION.

DRAWN BY	RICH SMOTHERS	12/22/2022	
CHECKED BY			
PRINT DATE	1/16/2023		
CONFIG.	Default		
COMMENTS:			

PROPRIETARY AND CONFIDENTIAL
THE INFORMATION CONTAINED IN THIS DRAWING IS THE SOLE PROPERTY OF DALTON AG. ANY REPRODUCTION IN PART OR AS A WHOLE WITHOUT THE WRITTEN PERMISSION OF DALTON AG IS PROHIBITED.

Dalton AG PRODUCTS USA
www.DaltonAg.com

DWG: DLQ GULLWING MOUNT AND HARDWARE

SIZE	SHEET TITLE:	REV
A	Sheet2	A

FOR PARTS, CALL 1.800.342.7498

SCALE: 1:192 SHEET 2 OF 2

HYDRAULIC LIFT TEE MOUNT HARDWARE AND INSTALLATION

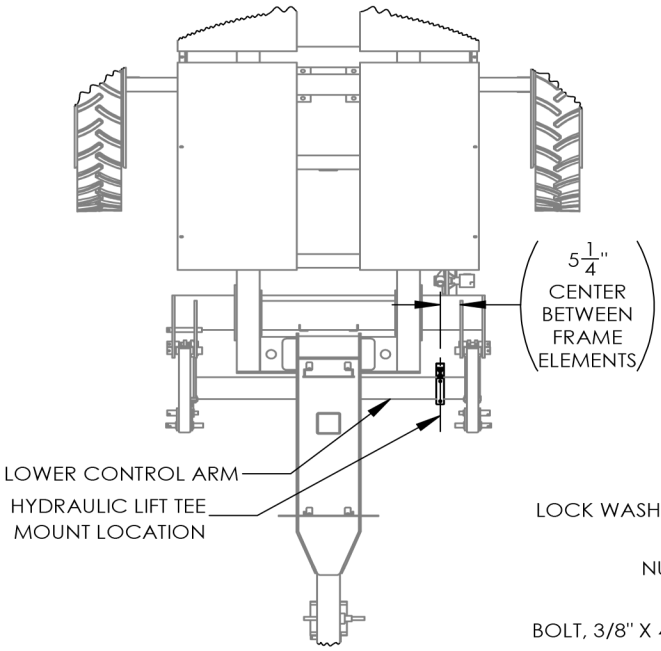

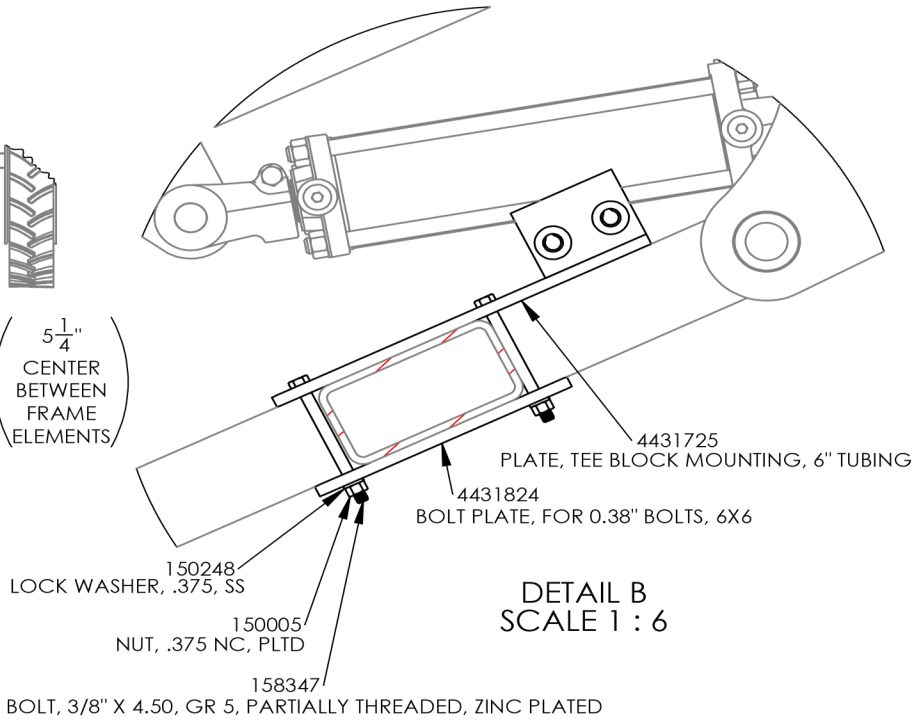

DETAIL B
SCALE 1 : 6

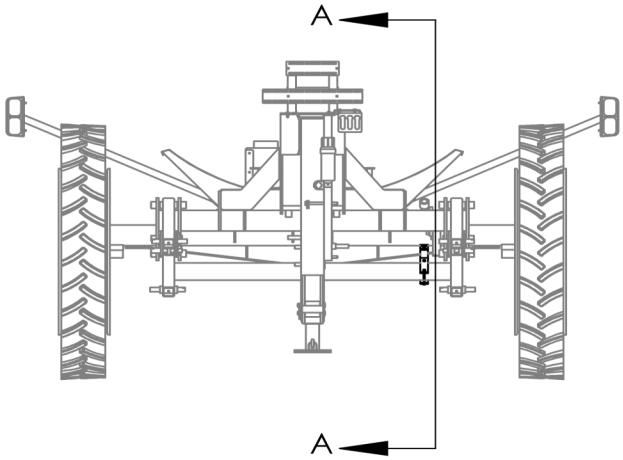

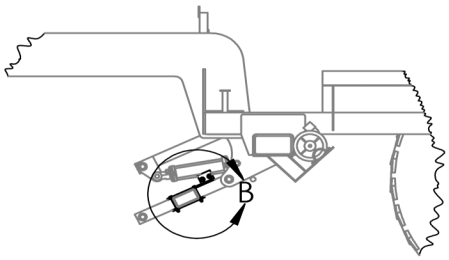

SECTION A-A
SCALE 1 : 48

DRAWN BY	--	6/2/2014	
CHECKED BY			
PRINT DATE	5/7/2025		
CONFIG.	Default		

Dalton AG PRODUCTS USA
www.DaltonAg.com

PROPRIETARY AND CONFIDENTIAL
THE INFORMATION CONTAINED IN THIS DRAWING IS THE SOLE PROPERTY OF DALTON AG. ANY REPRODUCTION IN PART OR AS A WHOLE WITHOUT THE WRITTEN PERMISSION OF DALTON AG IS PROHIBITED.

COMMENTS:

DWG: DLQ LIFT TEE MOUNT HARDWARE AND INSTALLATION

SIZE	SHEET TITLE:	REV
A	Sheet1	A

FOR PARTS, CALL 1.800.342.7498

SCALE: 1:96 | SHEET 1 OF 1

DLQ WING LOCK

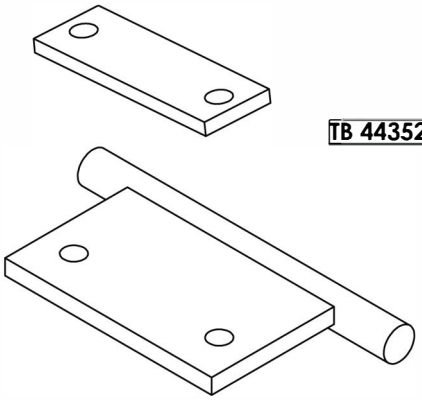

TB 4435227 BOLT PLATE, WING LOCK HOOK

TB 4420425 WING LOCK HOOK, WELDMENT

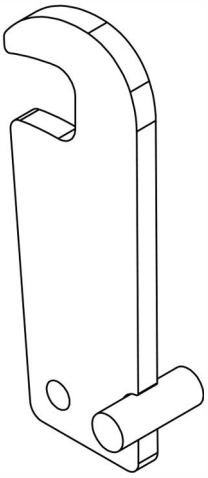

4420945 WING LATCH

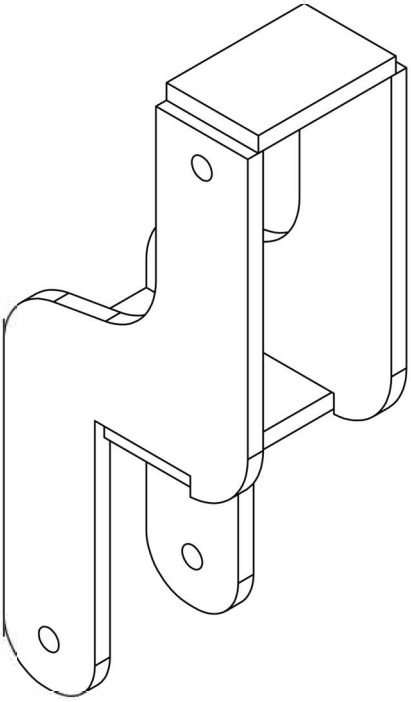

4420943 TB WING LOCK, 4x6, OFFSET BASE

DRAWN BY	RICH SMOTHERS	1/25/2012	
CHECKED BY			
PRINT DATE	12/16/2022		
CONFIG.	Default		

Dalton AG PRODUCTS USA
www.DaltonAg.com

PROPRIETARY AND CONFIDENTIAL
THE INFORMATION CONTAINED IN THIS DRAWING IS THE SOLE PROPERTY OF DALTON AG. ANY REPRODUCTION IN PART OR AS A WHOLE WITHOUT THE WRITTEN PERMISSION OF DALTON AG IS PROHIBITED.

COMMENTS:

DWG: DLQ WING LOCK-2022

SIZE A | SHEET TITLE: Sheet1 | REV A

SCALE: 1:4 | SHEET 1 OF 1

2 PIN GAUGE WHEEL AND BRACKET

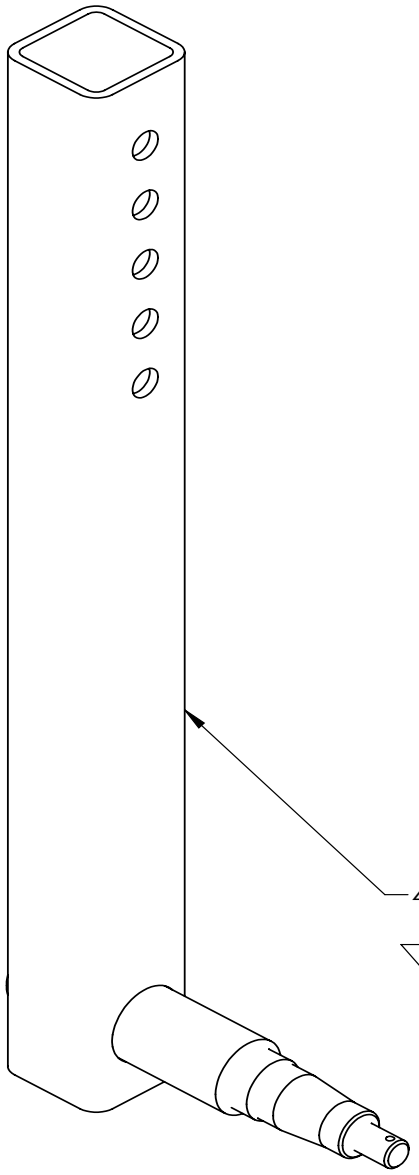

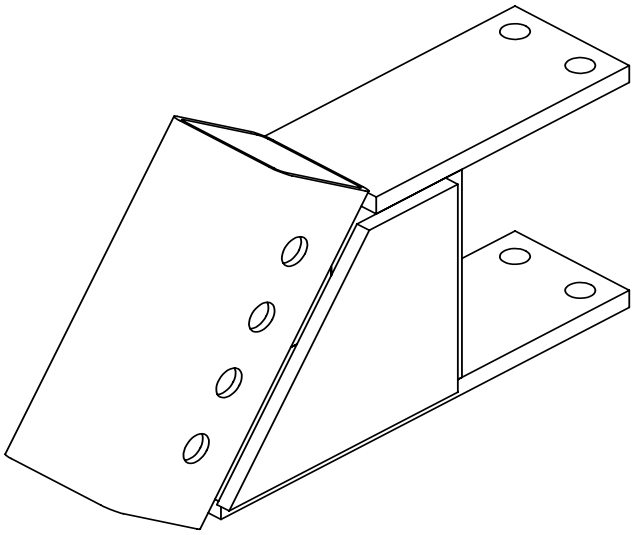

4420589 2 PIN GAUGE WHEEL BRACKET

Hardware:
2 - PULL RING PIN, .75 x 4.5

2 - 152422 BOLT, .625 NC x 8, G5
2 - 150222 LOCK WASHER, .625, PLTD
2 - 150010 NUT, .625 NC, PLTD

4410271 2 PIN GAUGE WHEEL

4420032 INNER TUBE WELDMENT, 2 PIN GAUGE WHEEL

4410086 888 6-BOLT HUB ASSEMBLY, COMPLETE

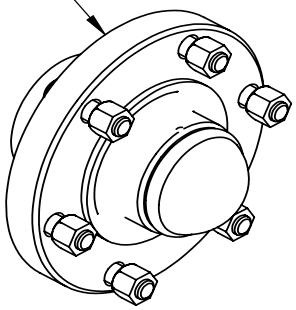

Optional:
110118 WHEEL, 15 x 8 x 6 BOLT
640461 TIRE, 11L x 15 x 8 PLY

DRAWN BY	RICH SMOTHERS	1/21/2014	
CHECKED BY			
PRINT DATE	6/21/2016		
CONFIG.	Default		
COMMENTS:			

Dalton AG PRODUCTS
www.DaltonAg.com

DWG: 2 PIN GAUGE WHEEL AND BRACKET

SIZE A | SHEET TITLE: Sheet1 | REV A

SCALE: 1:4 | SHEET 1 OF 1

PROPRIETARY AND CONFIDENTIAL
THE INFORMATION CONTAINED IN THIS DRAWING IS THE SOLE PROPERTY OF DALTON AG. ANY REPRODUCTION IN PART OR AS A WHOLE WITHOUT THE WRITTEN PERMISSION OF DALTON AG IS PROHIBITED.

4410086, 888 6-BOLT HUB ASSEMBLY, COMPLETE

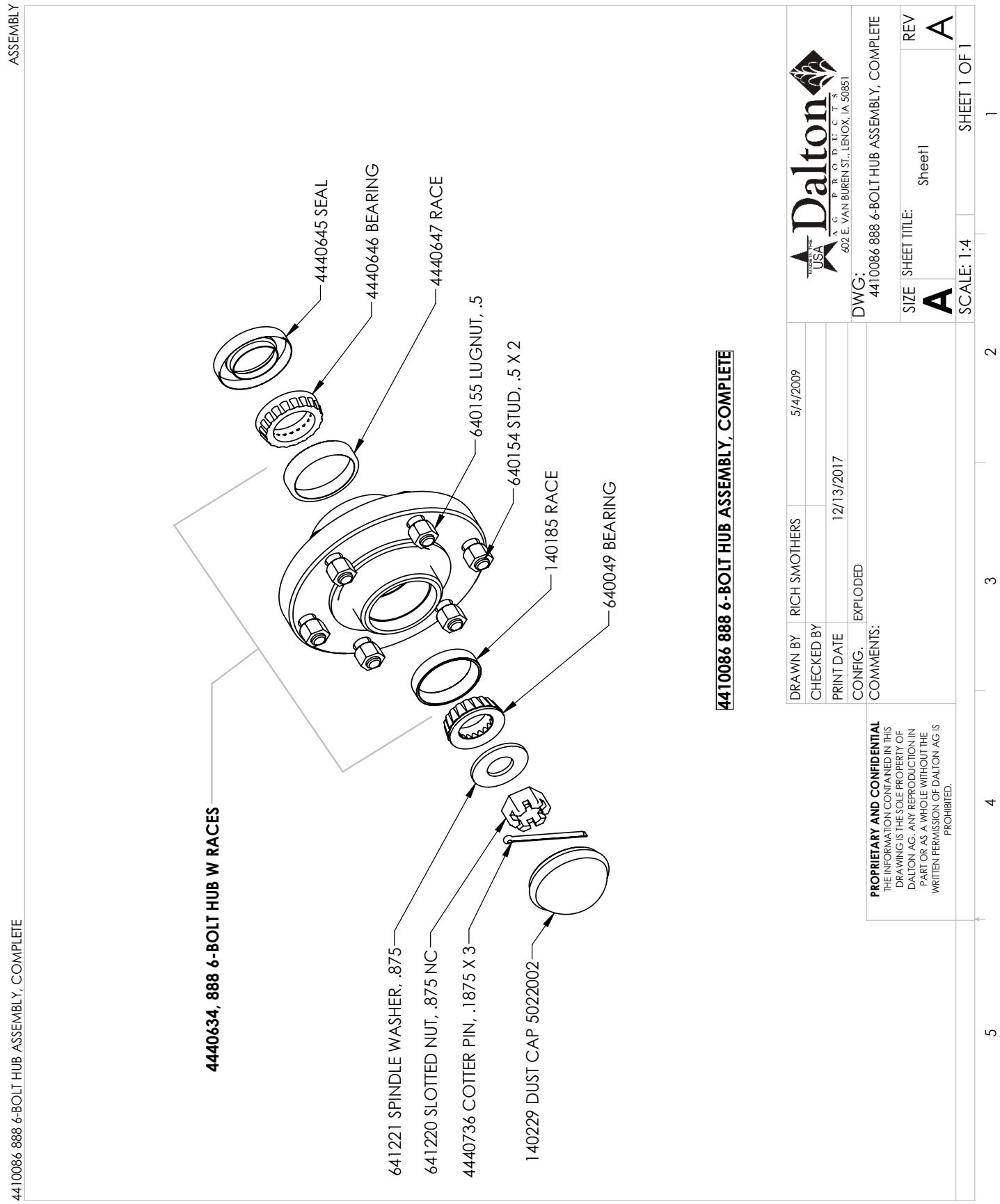

GROUND DRIVE ASSEMBLY

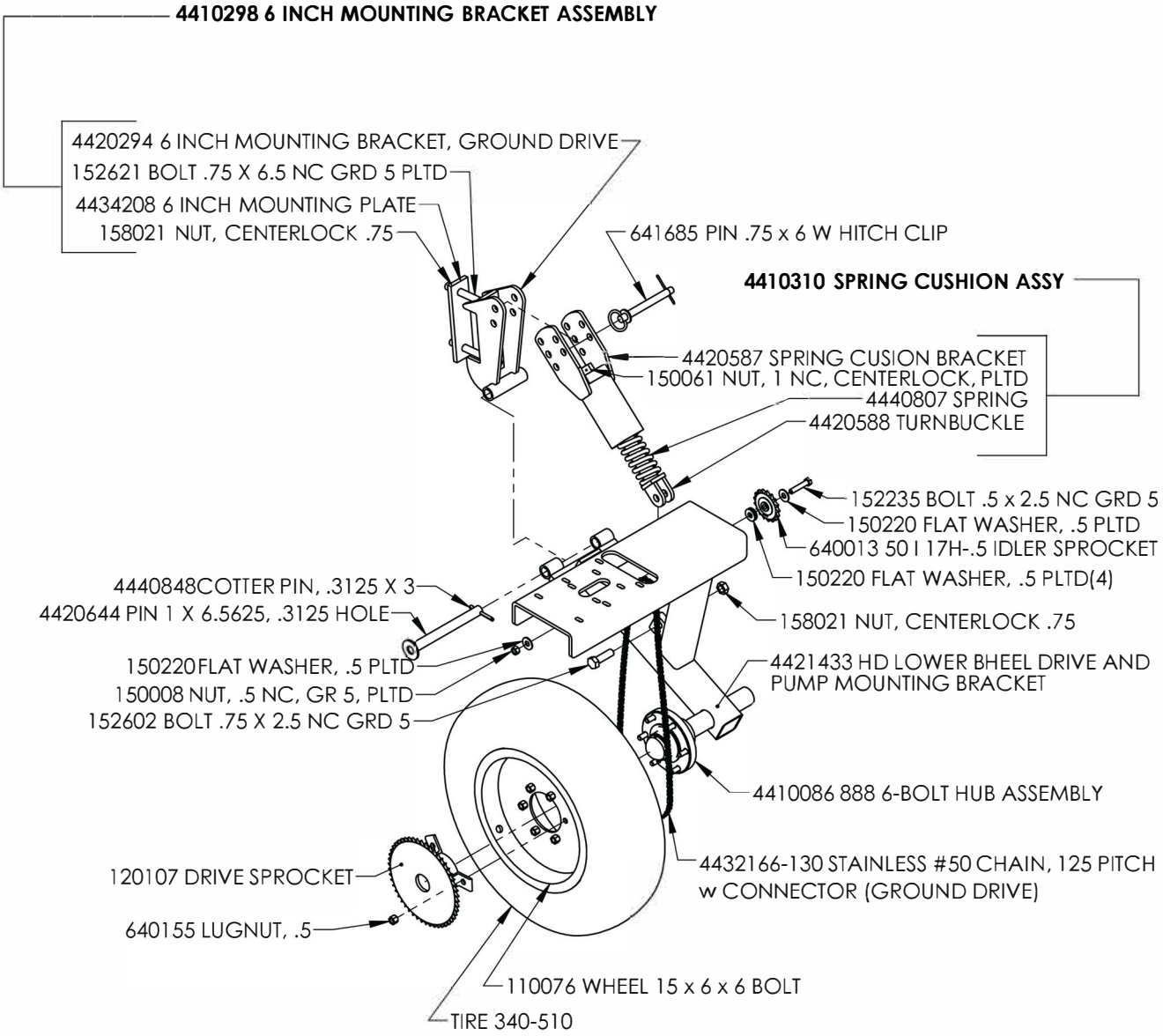

4410740 HD GROUND DRIVE ASSEMBLY, LESS PUMP WITH LUG TIRE

DRAWN BY	Jeremy Newton	5/21/2014	Dalton USA AG PRODUCTS www.DaltonAg.com
CHECKED BY			
PRINT DATE	12/16/2022		
CONFIG.	EXPLODED		
COMMENTS:			DWG: GROUND DRIVE ASSEMBLY, LESS PUMP WITH LUG TIRE
			SIZE A / SHEET TITLE: Sheet1 / REV A
			SCALE: 1:32 / SHEET 1 OF 1

PROPRIETARY AND CONFIDENTIAL
THE INFORMATION CONTAINED IN THIS DRAWING IS THE SOLE PROPERTY OF DALTON AG. ANY REPRODUCTION IN PART OR AS A WHOLE WITHOUT THE WRITTEN PERMISSION OF DALTON AG IS PROHIBITED.

FOR PARTS, CALL 1.800.342.7498

VISA FLOW LAYOUTS

GAGE LAYOUTS FOR GROUND DRIVE CONFIGURATIONS (JOHN BLUE PUMPS)

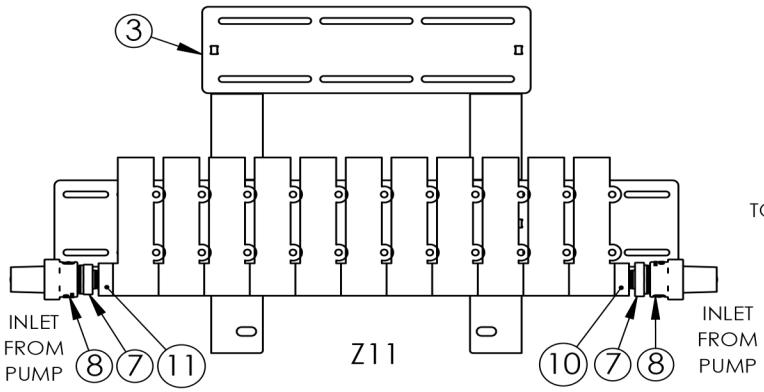

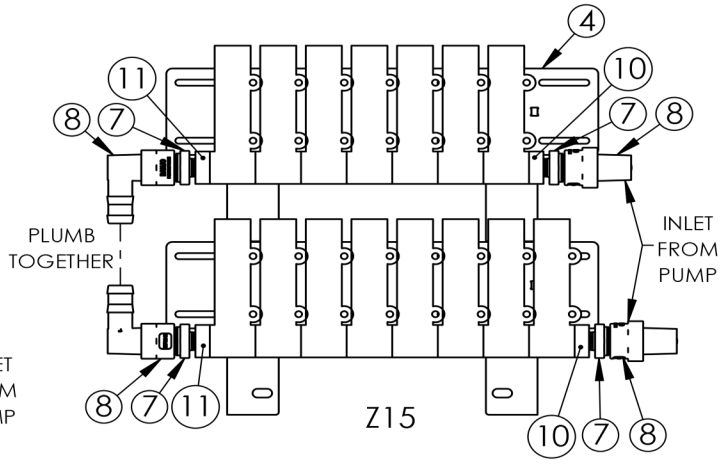

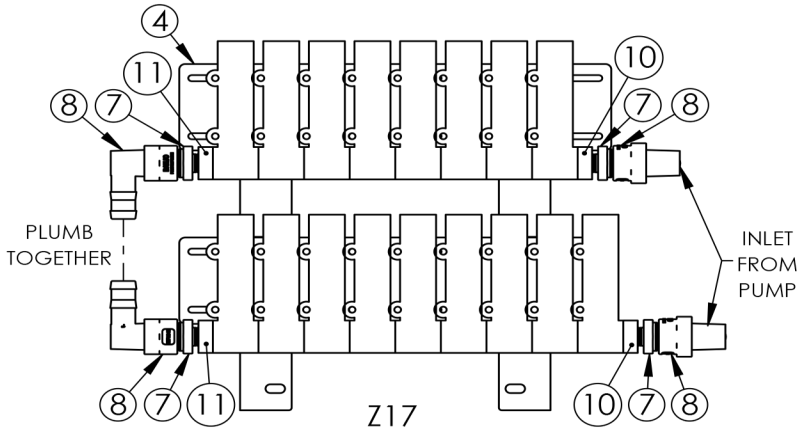

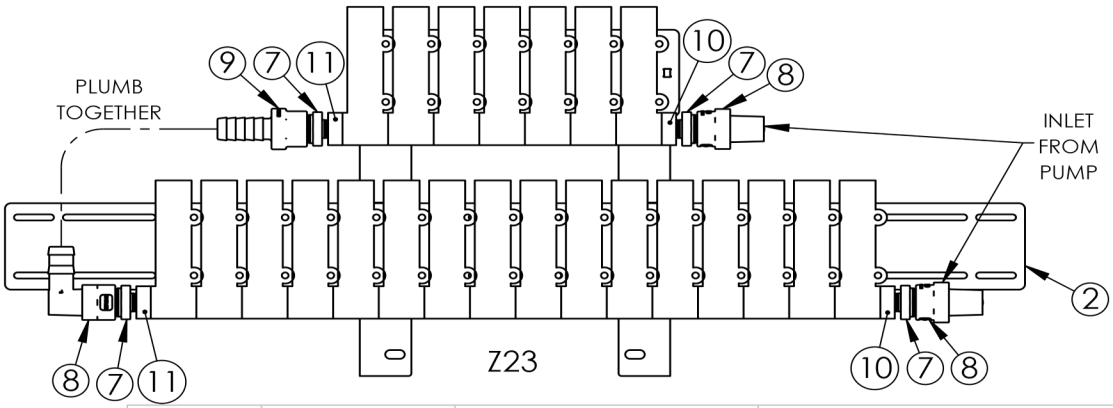

DRAWN BY	RICH SMOTHERS	12/20/2024	Dalton AG PRODUCTS MADE IN THE USA www.DaltonAg.com
CHECKED BY			
PRINT DATE	1/13/2025		
CONFIG.	Z11		

PROPRIETARY AND CONFIDENTIAL
THE INFORMATION CONTAINED IN THIS DRAWING IS THE SOLE PROPERTY OF DALTON AG. ANY REPRODUCTION IN PART OR AS A WHOLE WITHOUT THE WRITTEN PERMISSION OF DALTON AG IS PROHIBITED.

COMMENTS:

DWG: VISA FLOW LAYOUTS

SIZE A | SHEET TITLE: JOHN BLUE PUMPS | REV A

FOR PARTS, CALL 1.800.342.7498

SCALE: 1:8 | SHEET 1 OF 4

GAGE LAYOUTS FOR RAVEN CONTROLER AND THREE (3) SHUTOFFS

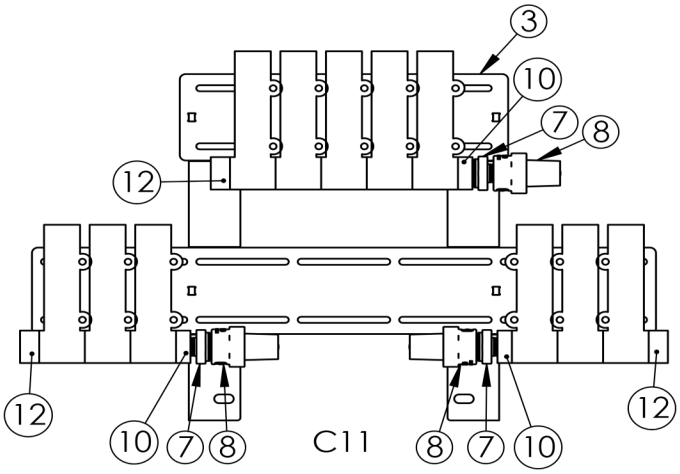

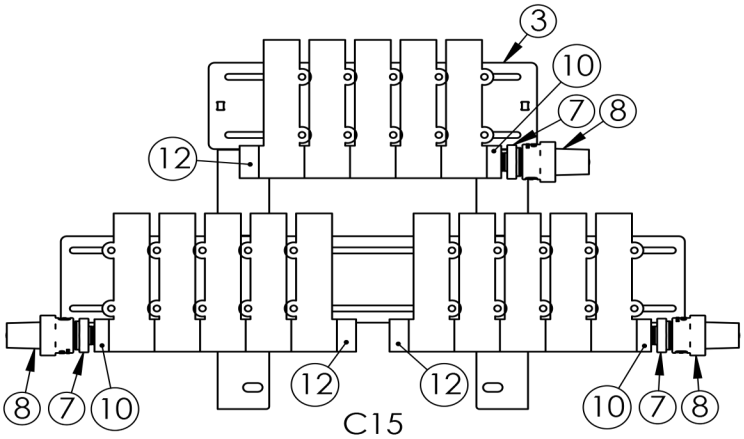

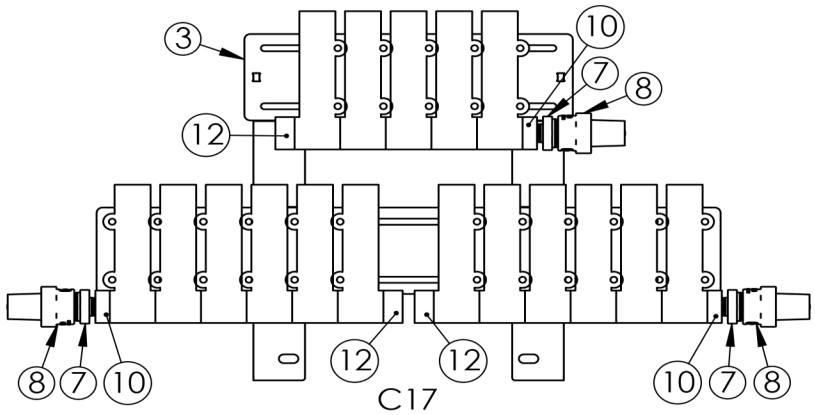

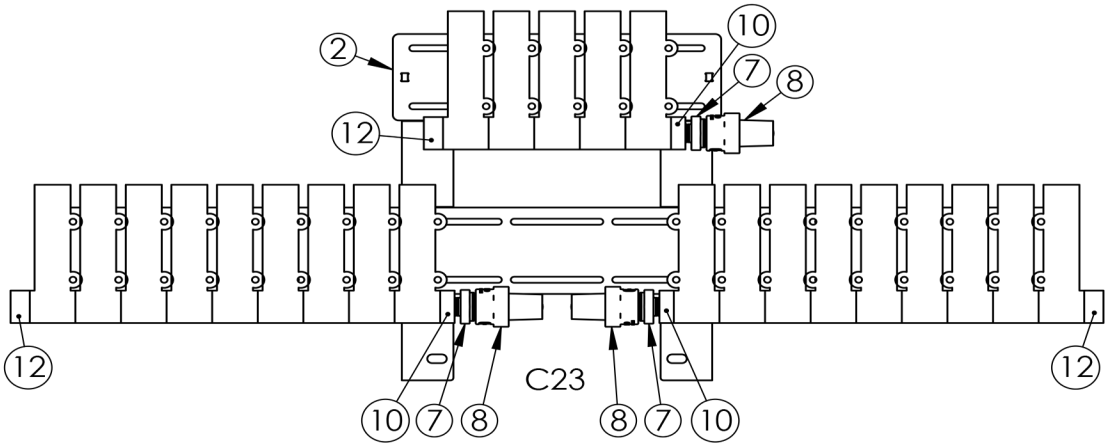

DRAWN BY	--	12/20/2024	
CHECKED BY			
PRINT DATE	1/13/2025		
CONFIG.	Z11		

MADE IN THE USA Dalton AG PRODUCTS www.DaltonAg.com

PROPRIETARY AND CONFIDENTIAL
THE INFORMATION CONTAINED IN THIS DRAWING IS THE SOLE PROPERTY OF DALTON AG. ANY REPRODUCTION IN PART OR AS A WHOLE WITHOUT THE WRITTEN PERMISSION OF DALTON AG IS PROHIBITED.

COMMENTS:

DWG: VISA FLOW LAYOUTS

SIZE **A** | SHEET TITLE: 3 SHUTOFFS | REV A

FOR PARTS, CALL 1.800.342.7498

SCALE: 1:8 | SHEET 2 OF 4

GAGE LAYOUTS FOR RAVEN CONTROLER AND FIVE (5) SHUTOFFS

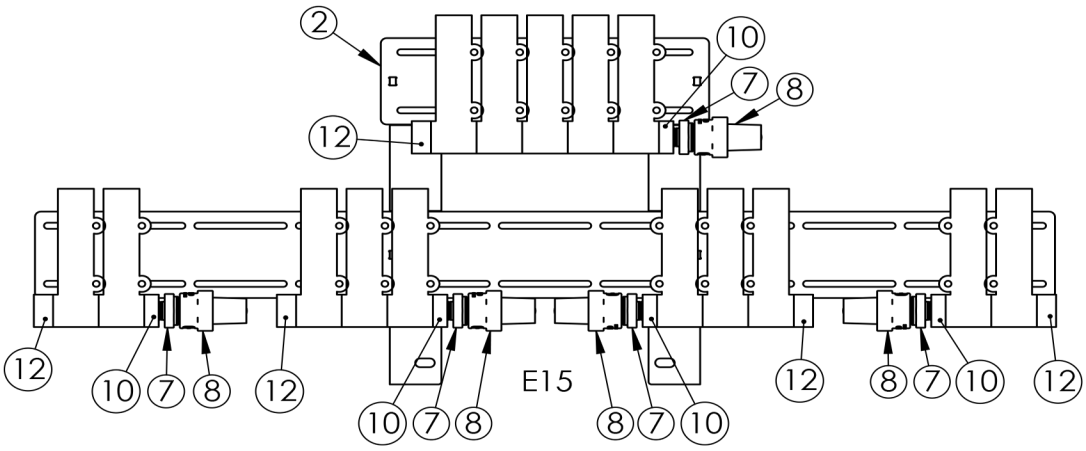

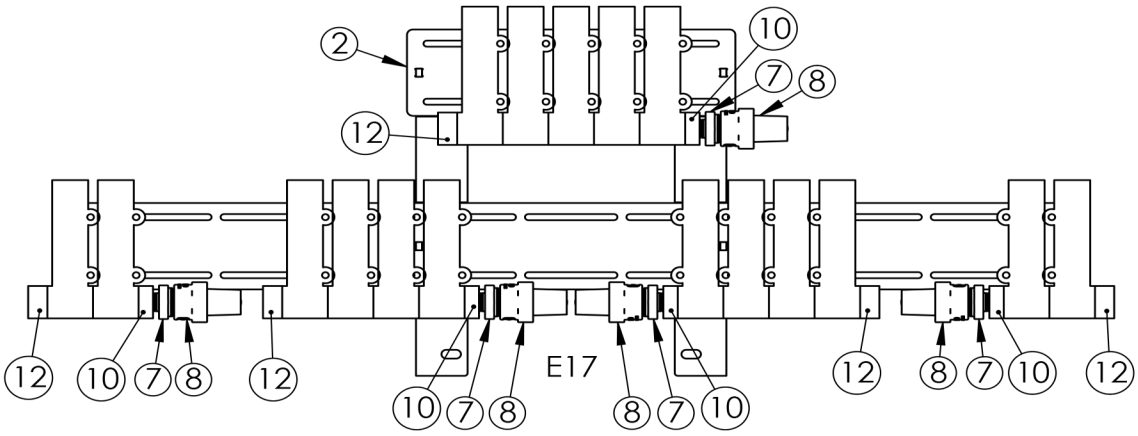

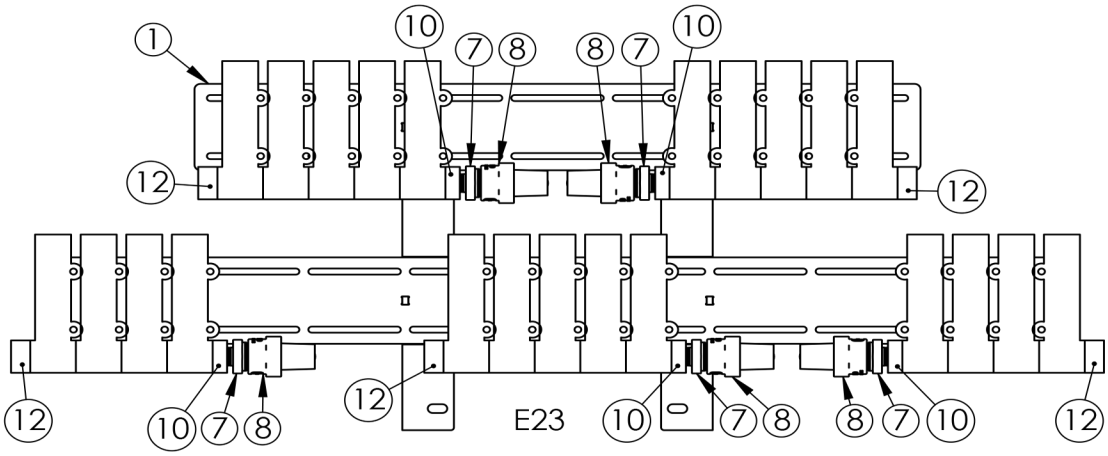

DRAWN BY	RICH SMOTHERS	12/20/2024
CHECKED BY		
PRINT DATE	1/13/2025	
CONFIG.	Z11	

MADE IN THE USA Dalton AG PRODUCTS
www.DaltonAg.com

PROPRIETARY AND CONFIDENTIAL
THE INFORMATION CONTAINED IN THIS DRAWING IS THE SOLE PROPERTY OF DALTON AG. ANY REPRODUCTION IN PART OR AS A WHOLE WITHOUT THE WRITTEN PERMISSION OF DALTON AG IS PROHIBITED.

COMMENTS:

DWG: VISA FLOW LAYOUTS

SIZE A | SHEET TITLE: 5 SHUTOFFS | REV A

FOR PARTS, CALL 1.800.342.7498

SCALE: 1:12 | SHEET 3 OF 4

VISA FLOW LAYOUTS CONT.

		(SMSS4/SMSS1) - (GAGE BANK CONFIG.)					KNIVES/SECTION
# ROWS	11	2/3 - 11		1/7 - 3/5/3			3/5/3
	13						
	15	3/3 - 8/7		3/3 - 5/5/5		1/11 - 2/3/5/3/2	2/3/5/3/2
	17	4/1 - 9/8		3/5 - 6/5/6		3/5 - 2/4/5/4/2	2/4/5/4/2
	23	5/3 - 16/7		5/3 - 9/5/9		5/3 - 5/4/5/4/5	2/3/4/5/4/3/2
		1 (Z)	2 (B)	3 (C)	4 (D)	5 (E)	
		# SHUTOFFS					

↑

JOHN BLUE ONLY (2 HOSES FROM PUMP)

ITEM NO.	PART NUMBER	DESCRIPTION
1	4421296	DLQ FLOW MONITOR PANEL, 3
2	4421946	DLQ FLOW MONITOR PANEL, 4
3	4420840	DLQ FLOW MONITOR PANEL, 1
4	4420841	DLQ FLOW MONITOR PANEL, 2
5	SMSS4	MONITOR ASSMY., VISA GAUGE II, FOR VISUAL FLOW
6	SMSS1	SINGLE MONITOR ASSEMBLY - SPRAY TYPE
7	RN100-050	1" X ½" POLY REDUCING NIPPLE
8	HBF100-90	1" 90° FEMALE NPT X 1" HOSE BARB
9	HBF100	1" FEMALE THREAD X 1" HOSE SHANK
10	SMPT-0004	1/2" FEMALE NPT ADAPTER (INLET), POLYPROPYLENE
11	SMPT-0061	FLOW-THRU END CAP FOR SS STYLE, 1/2" FEMALE NPT (OUTLET), POLYPROPYLENE
12	SMPT-0008	END CAP, POLYPROPYLENE

DRAWN BY	RICH SMOTHERS	12/20/2024
CHECKED BY		
PRINT DATE	1/13/2025	
CONFIG.	Z11	

Dalton AG PRODUCTS MADE IN THE USA
www.DaltonAg.com

PROPRIETARY AND CONFIDENTIAL
THE INFORMATION CONTAINED IN THIS DRAWING IS THE SOLE PROPERTY OF DALTON AG. ANY REPRODUCTION IN PART OR AS A WHOLE WITHOUT THE WRITTEN PERMISSION OF DALTON AG IS PROHIBITED.

COMMENTS:

DWG: VISA FLOW LAYOUTS

SIZE A | SHEET TITLE: Sheet1 | REV A

FOR PARTS, CALL 1.800.342.7498

SCALE: 1:12 | SHEET 4 OF 4

TANK PLUMBING

TANK DRAIN/VALVE AND 3" BOTTOM FILL PLUMBING

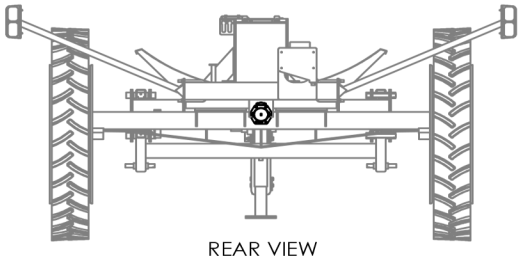

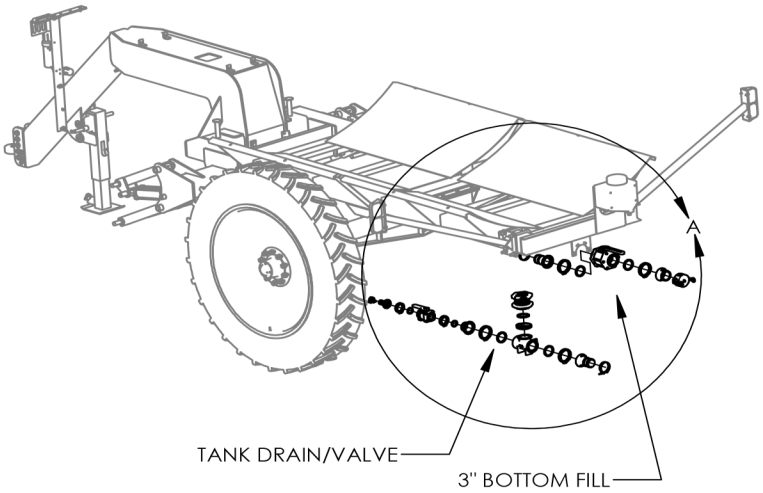

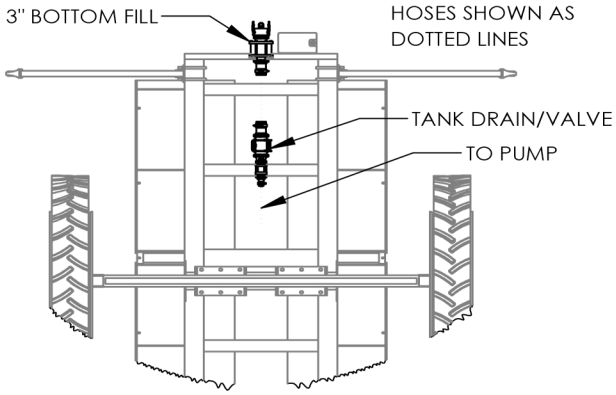

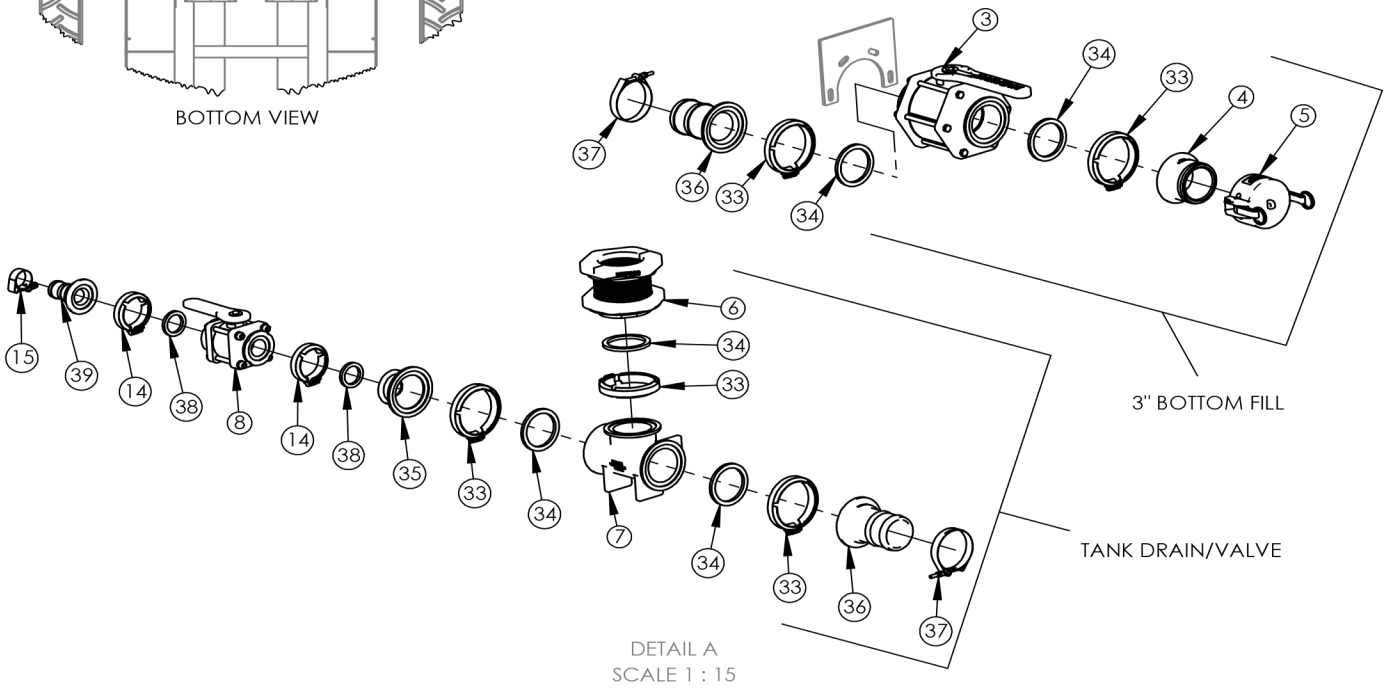

DRAWN BY	--	6/2/2014
CHECKED BY		
PRINT DATE	12/11/2024	
CONFIG.	REAR TANK PLUMBING	

Dalton AG PRODUCTS USA
www.DaltonAg.com

PROPRIETARY AND CONFIDENTIAL
THE INFORMATION CONTAINED IN THIS DRAWING IS THE SOLE PROPERTY OF DALTON AG. ANY REPRODUCTION IN PART OR AS A WHOLE WITHOUT THE WRITTEN PERMISSION OF DALTON AG IS PROHIBITED.

COMMENTS:

DWG: DLQ TANK PLUMBING

SIZE	SHEET TITLE:	REV
A	REAR TANK PLUMBING	A

FOR PARTS, CALL 1.800.342.7498

SCALE: 1:128 | SHEET 1 OF 7

PUMP HOSE CONNECTION HARDWARE

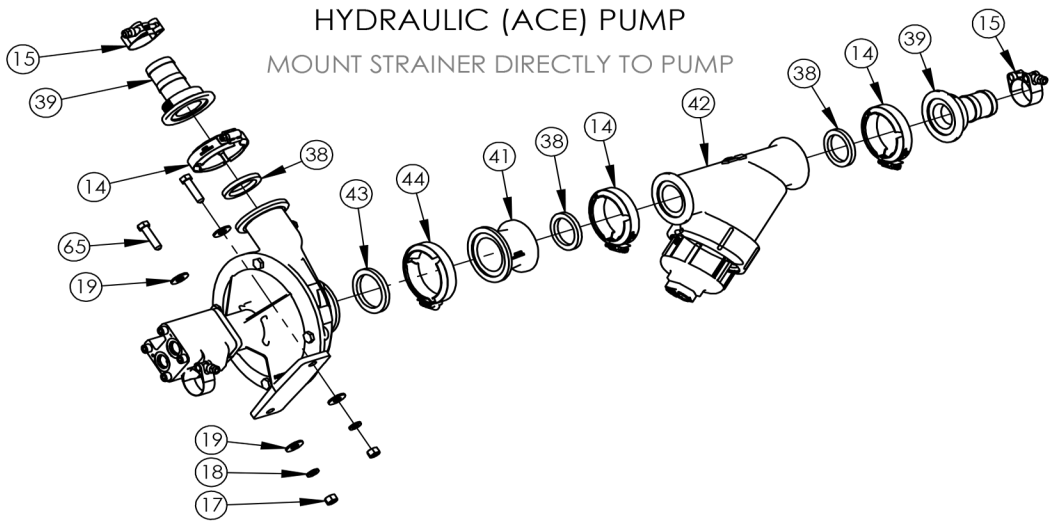

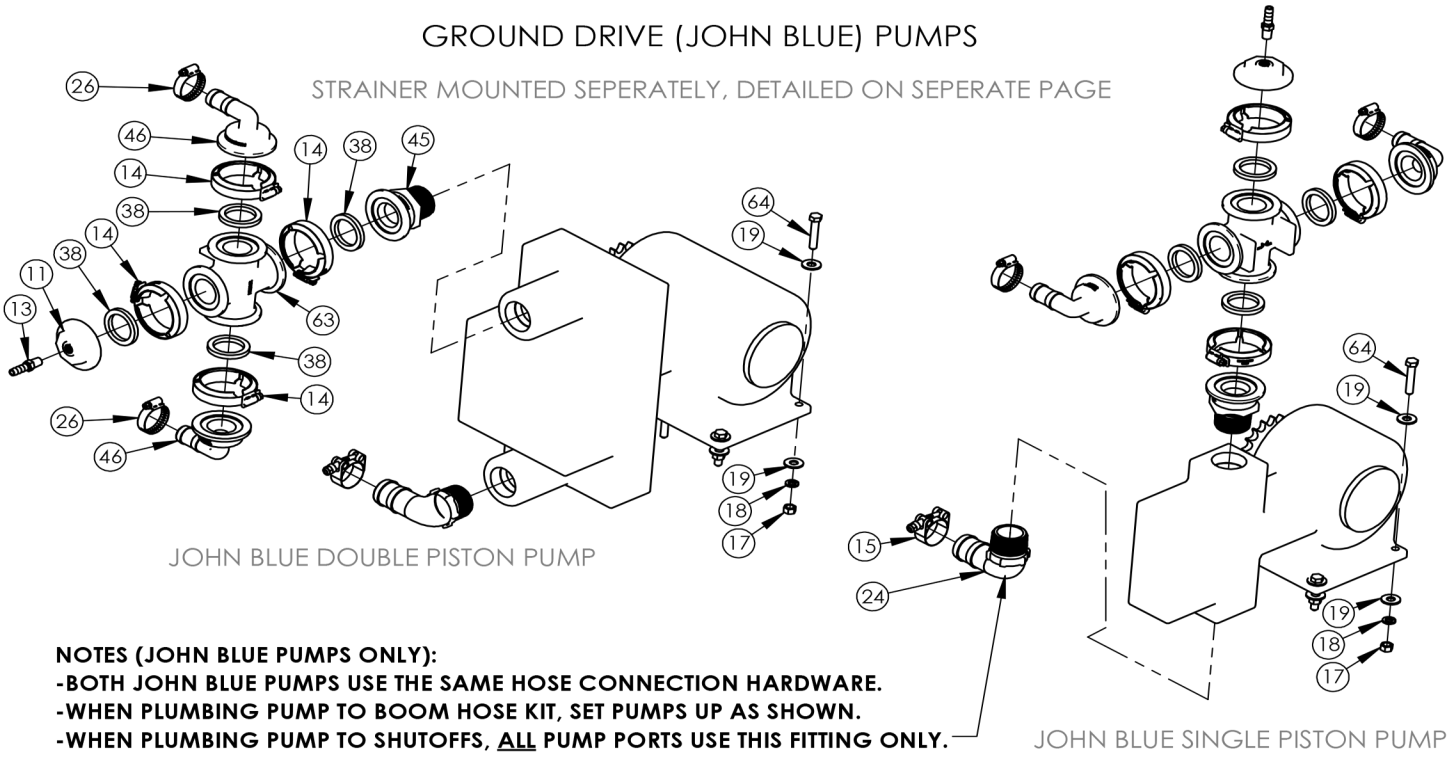

NOTES (JOHN BLUE PUMPS ONLY):
-BOTH JOHN BLUE PUMPS USE THE SAME HOSE CONNECTION HARDWARE.
-WHEN PLUMBING PUMP TO BOOM HOSE KIT, SET PUMPS UP AS SHOWN.
-WHEN PLUMBING PUMP TO SHUTOFFS, ALL PUMP PORTS USE THIS FITTING ONLY.

DRAWN BY	RICH SMOTHERS	6/2/2014
CHECKED BY		
PRINT DATE	12/11/2024	
CONFIG.	REAR TANK PLUMBING	

Dalton USA AG PRODUCTS
www.DaltonAg.com

PROPRIETARY AND CONFIDENTIAL
THE INFORMATION CONTAINED IN THIS DRAWING IS THE SOLE PROPERTY OF DALTON AG. ANY REPRODUCTION IN PART OR AS A WHOLE WITHOUT THE WRITTEN PERMISSION OF DALTON AG IS PROHIBITED.

COMMENTS:

DWG: DLQ TANK PLUMBING

SIZE A | SHEET TITLE: PUMP HOSE CONNECTIONS | REV A

FOR PARTS, CALL 1.800.342.7498

SCALE: 1:192 | SHEET 2 OF 7

TANK PLUMBING CONT.

STRAINER ASSEMBLY (JOHN BLUE PUMPS ONLY)

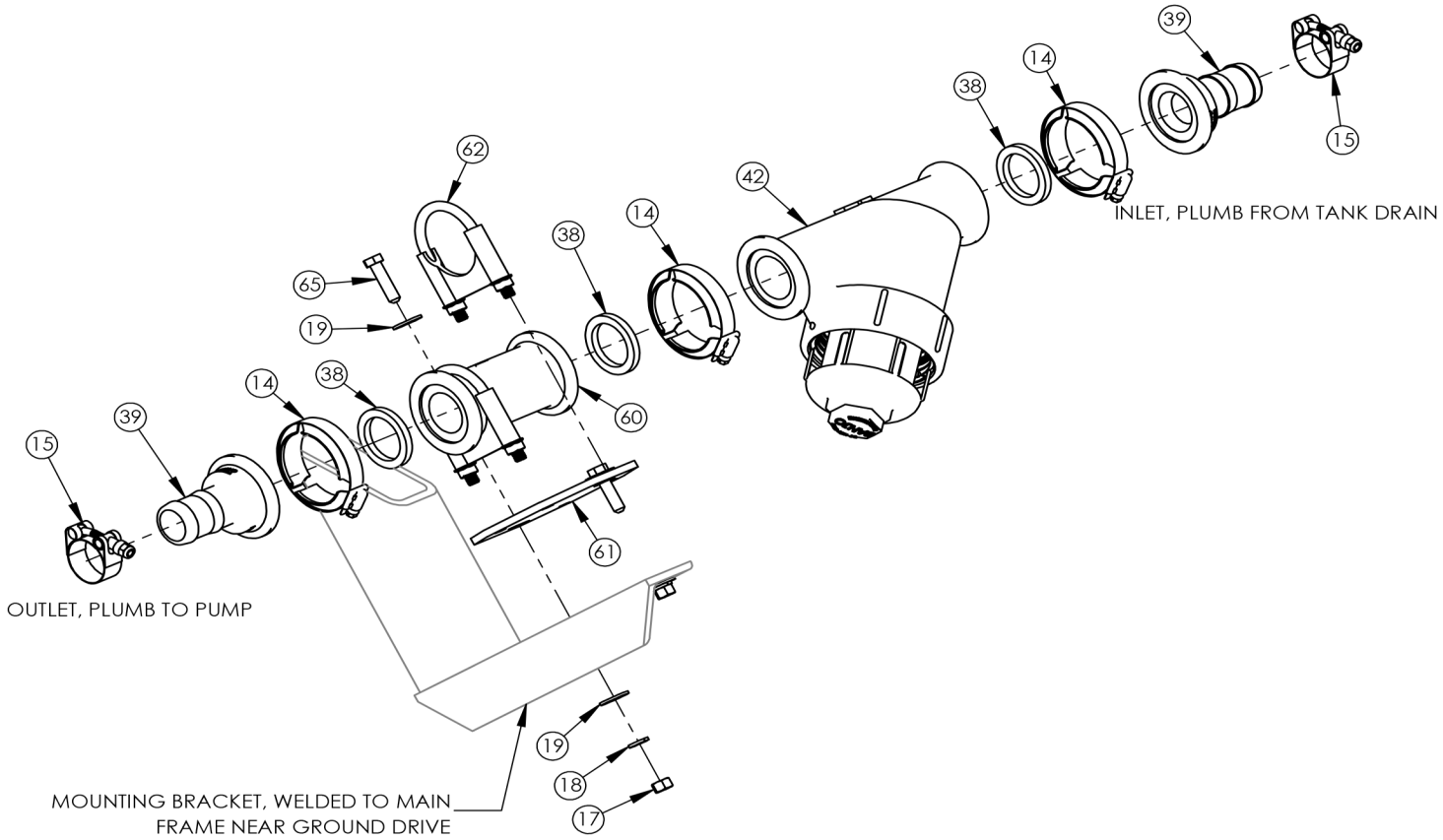

DRAWN BY	RICH SMOTHERS	6/2/2014	
CHECKED BY			
PRINT DATE	12/11/2024		
CONFIG.	REAR TANK PLUMBING		

Dalton AG PRODUCTS USA
www.DaltonAg.com

PROPRIETARY AND CONFIDENTIAL
THE INFORMATION CONTAINED IN THIS DRAWING IS THE SOLE PROPERTY OF DALTON AG. ANY REPRODUCTION IN PART OR AS A WHOLE WITHOUT THE WRITTEN PERMISSION OF DALTON AG IS PROHIBITED.

COMMENTS:

DWG: DLQ TANK PLUMBING

SIZE: A | SHEET TITLE: STRAINER MOUNT | REV: A

FOR PARTS, CALL 1.800.342.7498

SCALE: 1:192 | SHEET 3 OF 7

TANK PLUMBING CONT.

RAVEN FLOW KIT W/ ACE PUMP OPTION

NOTES:
-HOSES NOT SHOWN
-DETAIL VIEWS SHOWN ON NEXT PAGE

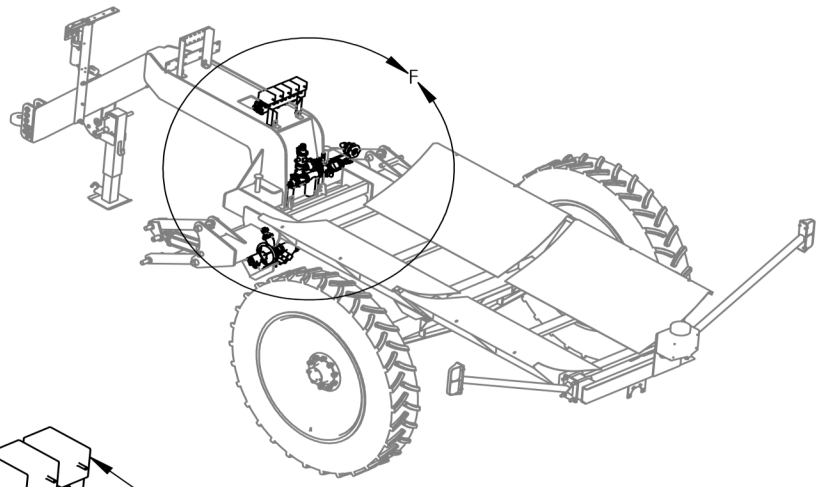

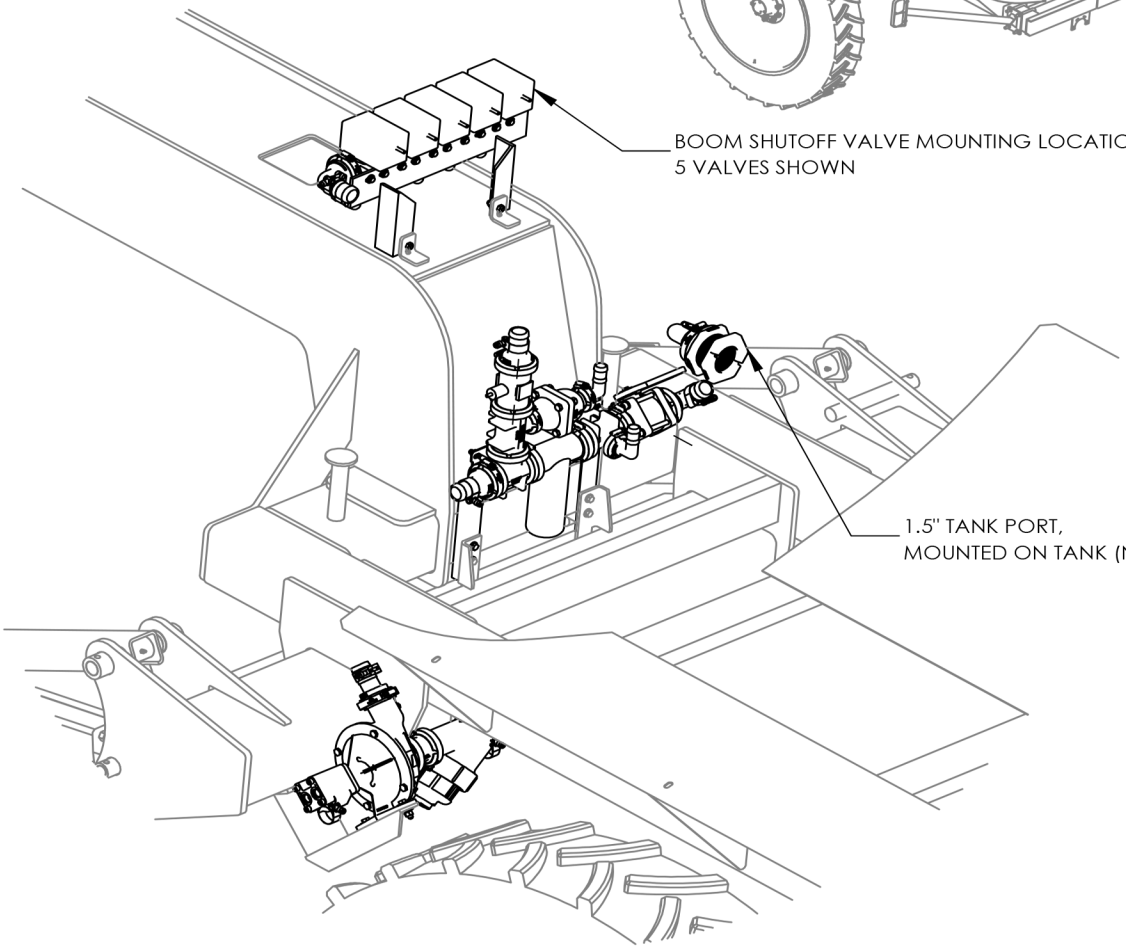

DETAIL F
SCALE 1 : 15

DRAWN BY	RICH SMOTHERS	6/2/2014	
CHECKED BY			
PRINT DATE	12/11/2024		
CONFIG.	REAR TANK PLUMBING		

Dalton USA AG PRODUCTS
www.DaltonAg.com

PROPRIETARY AND CONFIDENTIAL
THE INFORMATION CONTAINED IN THIS DRAWING IS THE SOLE PROPERTY OF DALTON AG. ANY REPRODUCTION IN PART OR AS A WHOLE WITHOUT THE WRITTEN PERMISSION OF DALTON AG IS PROHIBITED.

COMMENTS:

DWG: DLQ TANK PLUMBING

SIZE A | SHEET TITLE: RAVEN KIT LAYOUT | REV A

FOR PARTS, CALL 1.800.342.7498

SCALE: 1:128 | SHEET 4 OF 7

TANK PLUMBING CONT.

RAVEN FLOW KIT W/ ACE PUMP OPTION
SHUTOFF VALVES AND FLOW METER SUBASSEMBLIES

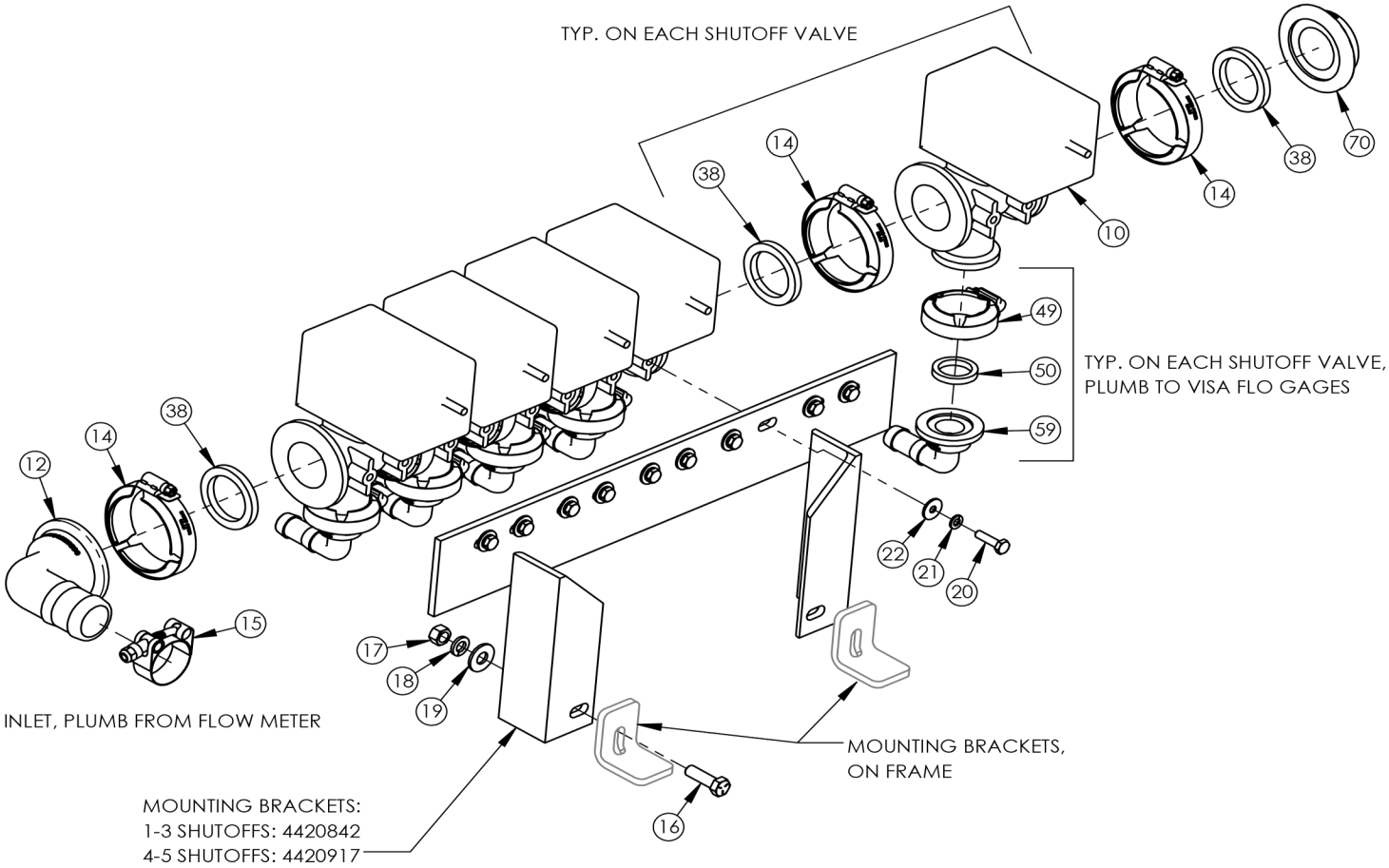

DRAWN BY	RICH SMOTHERS	6/2/2014	
CHECKED BY			
PRINT DATE	12/11/2024		
CONFIG.	REAR TANK PLUMBING		

Dalton USA AG PRODUCTS
www.DaltonAg.com

PROPRIETARY AND CONFIDENTIAL
THE INFORMATION CONTAINED IN THIS DRAWING IS THE SOLE PROPERTY OF DALTON AG. ANY REPRODUCTION IN PART OR AS A WHOLE WITHOUT THE WRITTEN PERMISSION OF DALTON AG IS PROHIBITED.

COMMENTS:

DWG: DLQ TANK PLUMBING

SIZE **A** | SHEET TITLE: RAVEN KIT EXPLODED VIEWS | REV A

FOR PARTS, CALL 1.800.342.7498

SCALE: 1:128 | SHEET 5 OF 7

TANK PLUMBING CONT.

RAVEN FLOW KIT W/ ACE PUMP OPTION
TANK RECIRCULATION AND SHUTOFF SUBASSEMBLY

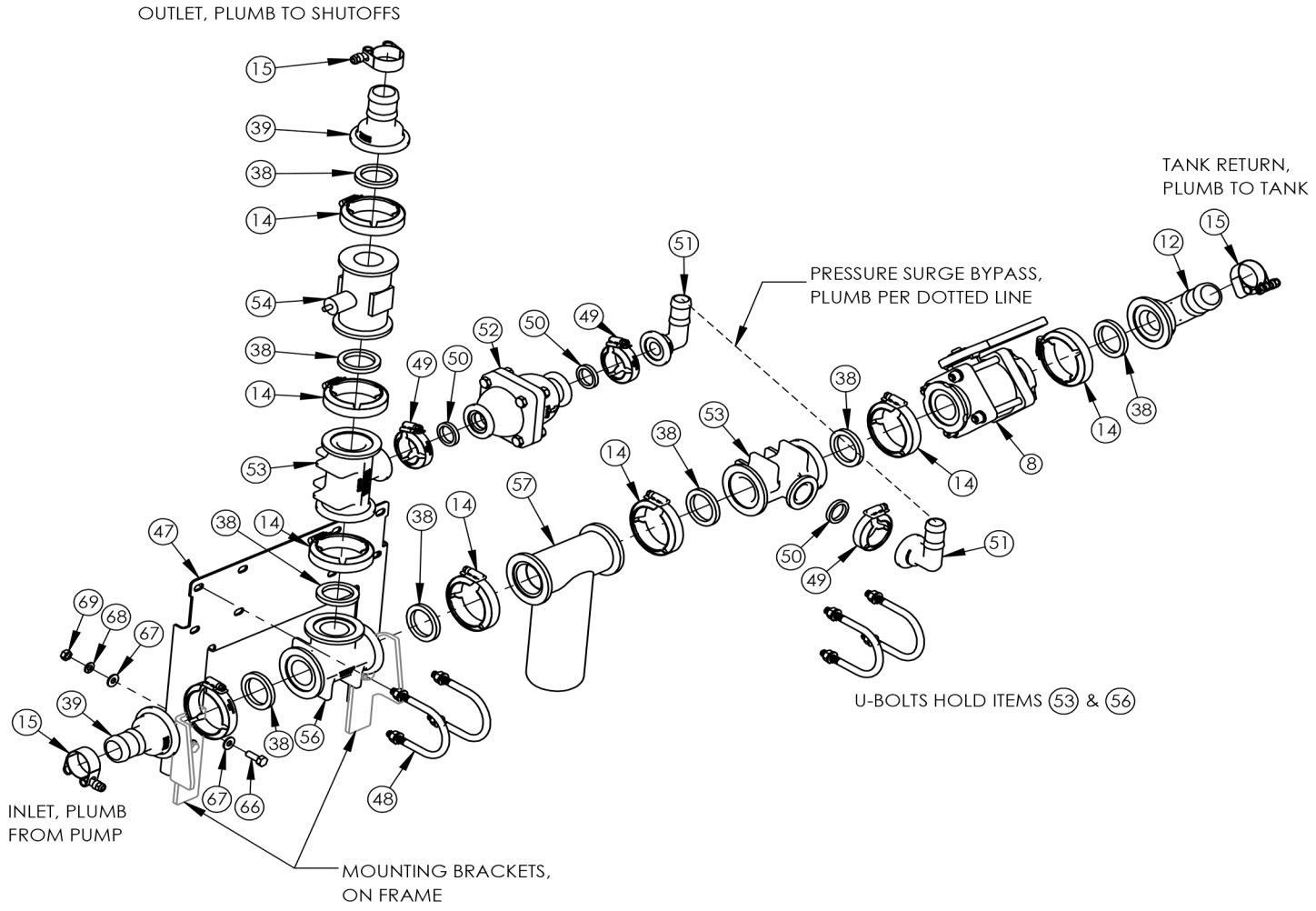

DRAWN BY	RICH SMOTHERS	6/2/2014	
CHECKED BY			
PRINT DATE	12/11/2024		
CONFIG.	REAR TANK PLUMBING		

Dalton USA AG PRODUCTS
www.DaltonAg.com

PROPRIETARY AND CONFIDENTIAL
THE INFORMATION CONTAINED IN THIS DRAWING IS THE SOLE PROPERTY OF DALTON AG. ANY REPRODUCTION IN PART OR AS A WHOLE WITHOUT THE WRITTEN PERMISSION OF DALTON AG IS PROHIBITED.

COMMENTS:

DWG: DLQ TANK PLUMBING

SIZE A | SHEET TITLE: RAVEN KIT EXPLODED VIEWS - 2 | REV A

FOR PARTS, CALL 1.800.342.7498

SCALE: 1:128 | SHEET 6 OF 7

TANK PLUMBING CONT.

PLUMBING SYSTEM COMPONENTS LIST

ITEM NO.	PART NUMBER	DESCRIPTION	QTY.
1	4420842	RAVEN VALVE MOUNT	1
2	4420840	DLQ FLOW MONITOR PANEL, 1	1
3	MV300CF	3" x 3" FP MANIFOLD FLANGE BOLTED BALL VALVE	1
4	M300A	3 IN FP FLANGE X 3 IN CAM LOCK	1
5	300CAP	3" CAP X MALE ADAPTER POLY CAM LEVER COUPLER	1
6	MTF300BD	3" TANK FITTING WITH FLANGE, BOTTOM DRAIN	1
7	M300TEE	3 in. Flanged Tee	1
8	MV200CF	2 in. X 2 in. Manifold Flange Bolted Ball Valve FKM Seals	2
9	4420917	RAVEN VALVE MOUNT	1
10	RV 063-0171-926	VALVE SINGLE MANIFOLD	5
11	M200PLG025	2" MANIFOLD PLUG W/ 1/4" FPT	2
12	M200-150BRB90	2" MANIFOLD FITTING, 1-1/2" HOSE BARB 90 DEGREE	2
13	4440967	1/4" MPT X 3/8" HOSE BARB, STAINLESS FITTING	2
14	FC200	200 SERIES WORM SCREW CLAMP, MANIFOLD FLANGE CONNECTIONS	30
15	4441748	T-BOLT CLAMP, 1.5", SS	12
16	151805	BOLT, .375 x 1.25 NC, PLTD	2
17	150005	NUT, .375 NC, PLTD	14
18	150248	LOCK WASHER, .375, SS	14
19	150212	FLAT WASHER USS, .375 PLTD	26
20	158147	BOLT, .25 x 1 NC, SS	10
21	150202	LOCK WASHER, .25 PLTD	10
22	150204	FLAT WASHER, .25 PLTD	10
23	NGP-7055	SINGLE PISTON PUMP, WITHOUT CLUTCH	1
24	HB150-90	1-1/2" BARBED X MNPT 90 DEGREE ELBOW	2
25	NGP-9055	DOUBLE PISTON PUMP, WITHOUT CLUTCH	1
26	4441180	HOSE CLAMP, WORM GEAR, 3/4" TO 1- 3/4", 1/2" BAND WIDTH, SAE 020 SS	7
27	HBT100-100	TEE HB 1"	1
28	RC100-075	COUPLING, REDUCER, 1" FPT TO 3/4" FPT	2
29	HB075-038	3/4" MPT X 3/8" HOSE BARB	2
30	HB100-90	1" BARBED X MNPT 90 DEGREE ELBOW	1
31	4441177	HOSE CLAMP, WORM GEAR, 3/8" TO 7/8", 1/2" BAND WIDTH, SAE 006 SS	2
32	4434231	TEE MOUNTING BRACKET	2
33	FC300	3" STANDARD PORT WORM SCREW CLAMP	5
34	300GV	GASKET 3 IN FLANGE VITON	5
35	M300200CPG	3 in. X 2 in. Reducer Flange	1

ITEM NO.	PART NUMBER	DESCRIPTION	QTY.
36	M300BRB	3 in. Flange X 3 in. Hose Barb	2
37	4441521	T-BOLT HOSE CLAMP, 3.43-3.75	2
38	150GV	GASKET, 1.5 IN VITON	30
39	M200150BRB	2" Flange X 1.5" Hose Bar	7
40	FMC-150F-HYD-206	ACE HYDRAULIC PUMP	1
41	M220200CPG	REDUCER COUPLING, MANIFOLD FLANGE, 2" FP TO 2"	1
42	MLS200-50	2 in. Polypropylene Manifold Y Line Strainer, 50 MESH	2
43	200GV	GASKET, 2 IN, VITON	2
44	FC220	FLANGE CLAMP, 220 SERIES, WORM SCREW	2
45	M200150MPT	ADAPTER, 1.5" NPT TO 2" MANIFOLD FLANGE	2
46	M200100BRB90	2" MANIFOLD FITTING, 1" HOSE BARB 90 DEGREE	4
47	4431766	MOUNTING BRACKET, FLOW CONTROL BANK	1
48	UB202	200 SERIES MOUNTING U-BOLT	4
49	FC100	100 SERIES WORM SCREW CLAMP	8
50	M100GV	100 SERIES GASKET, FKM	8
51	M100BRB90	1 in. Flange X 1 in. 90 Degree Hose Barb	2
52	MPRV100-075	100 X 100 PRESSURE SPIKE VALVE, FKM SEALS, 75 PSI	1
53	M200100TEE	2 in. X 1 in. Flanged Tee	2
54	RV 063-0171-985	RFM60P HIGH PULSE, RAVEN FLOW METER, LIQUID	1
55	M220150BRB90	2" FP X 1.5" 90 DEG HOSE BARB	1
56	M200TEE	TEE, 2 IN FLANGED	1
57	RV 063-0171-894	VALVE ASSMY, CONTROL, 1-1/2-200 FLANGED	1
58	MTF220BD	MANIFOLD BULKHEAD FITTINGK, 2 IN FP FLANGE	1
59	M100075BRB90	1" MANIFOLD FITTING, 3/4" HOSE BARB 90 DEGREE	5
60	M200CPG	MANIFOLD COUPLING 2 in. X 2 in. Flange X 4.5 in. Long	1
61	4431794	MOUNTING PLATE, STRAINER	1
62	3042T32	CLAMP, LOOP	2
63	M200CR	CROSS, 2" MANIFOLD FLANGE	2
64	151811	BOLT, .375 x 2 NC, G5, PLTD	8
65	151806	BOLT, .375 x 1.5 NC, G5, PLTD	4
66	151610	.3125 x 1 NC SS	4
67	158054	FLAT WASHER, .3125, SS	8
68	158053	LOCK WASHER, .3125 SS	4
69	150007	NUT, .3125 NC, SS	4
70	M200PLG	PLUG, FLANGE CONNECTION, 2"	1

DRAWN BY	RICH SMOTHERS	6/2/2014
CHECKED BY		
PRINT DATE	12/11/2024	
CONFIG.	REAR TANK PLUMBING	

Dalton USA AG PRODUCTS
www.DaltonAg.com

PROPRIETARY AND CONFIDENTIAL
THE INFORMATION CONTAINED IN THIS DRAWING IS THE SOLE PROPERTY OF DALTON AG. ANY REPRODUCTION IN PART OR AS A WHOLE WITHOUT THE WRITTEN PERMISSION OF DALTON AG IS PROHIBITED.

COMMENTS:

DWG: DLQ TANK PLUMBING

SIZE A | SHEET TITLE: BOM | REV A

FOR PARTS, CALL 1.800.342.7498

SCALE: 1:192 | SHEET 7 OF 7

YETTER COULTER ASSEMBLY

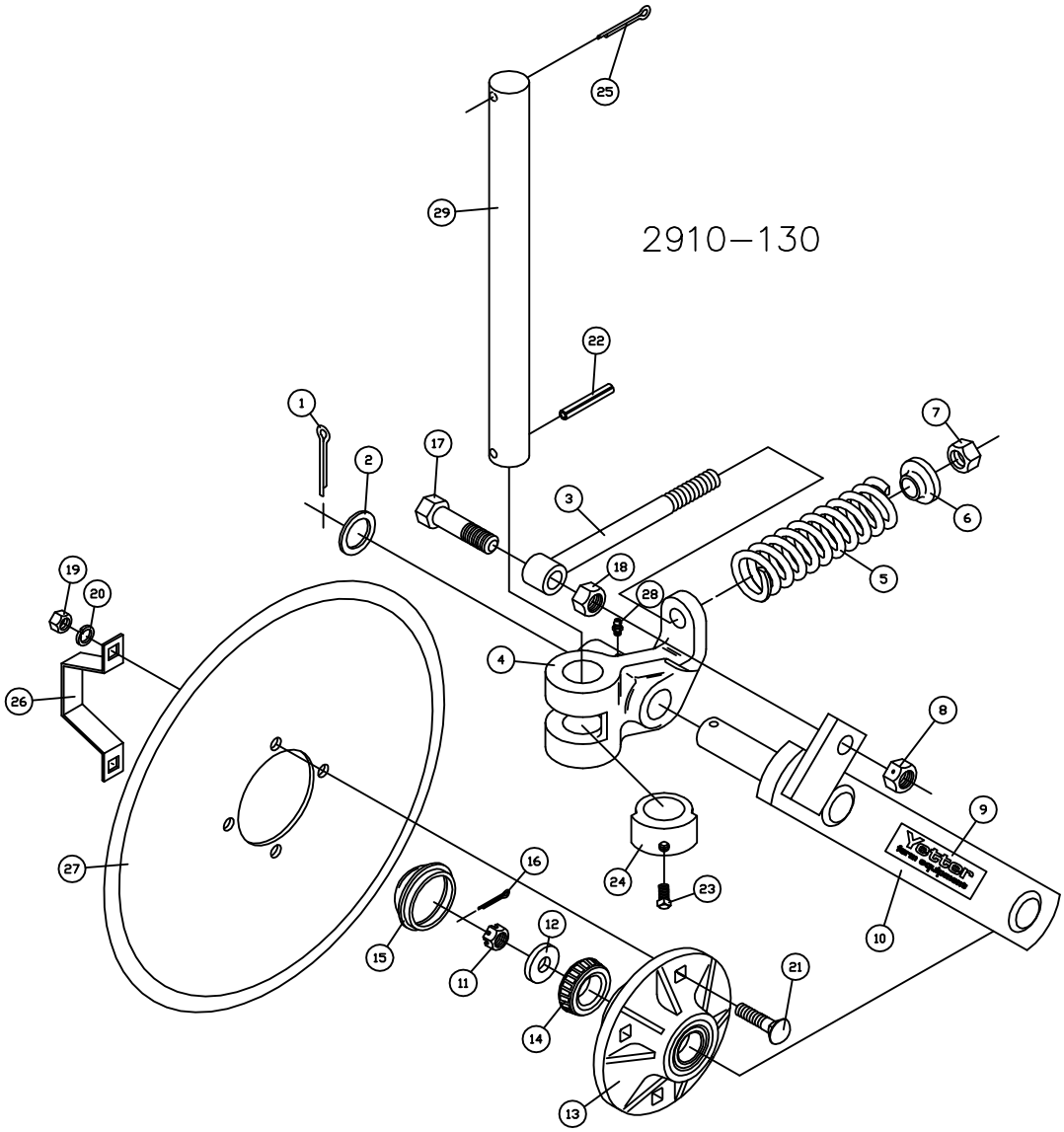

DET	QTY	PART NO.	DESCRIPTION
1	1	2531–125	1/4" X 1–3/4" COTTER PIN
2	1	2526–561	1–17/64"ID X1–7/8"OD X14GA WASHER
3	1	2570–125	EYEBOLT
4	1	2910–320	PIVOT
5	1	2910–311	SPRING
6	1	2910–302	SPRING BUSHING
7	1	2520–516	3/4"–10 NY–LOCK HEX NUT
8	1	2520–511	3/4"–16 LOCK HEX NUT
9	1	2565–162	DECAL–YETTER
10	1	2910–201	PIVOT ARM
11	1	2520–469	5/8"–18 SLOTTED HEX NUT
12	1	2526–449	5/8" FLATWASHER, 1/4" THICK
13	1	2900–102	HUB SUB–ASSEMBLY
	1	2550–027	CONE, LM67048
	1	2550–066	TRIPLE LIP SEAL
	1	2900–105	HUB/CUP PRESSED ASSEMBLY
	1	2533–110	1/4"–28 LUBE FITTING–SELF TAP
	1	2550–029	CUP, LM67010

DET	QTY	PART NO.	DESCRIPTION
14	1	2550–027	CONE, LM67048
15	1	2570–375	DUST CAP
16	1	2531–102	1/8" X 1–1/4" COTTER PIN
17	1	2502–410	3/4"–16 X 3" HEX BOLT GRADE 5
18	1	2520–508	3/4"–16 HEX NUT
19	4	2520–352	1/2"–13 HEX NUT
20	4	2525–352	1/2" LOCKWASHER
21	4	2505–337	1/2"–13 X 1 1/4" CARRIAGE BOLT GRADE 5
22	1	2530–208	3/8" X 2–1/2" ROLL PIN
23	1	2503–379	5/8"–11 X 1" SET SCREW
24	1	2910–301	SWIVEL COLLAR
25	1	2531–161	5/16" X 2–1/2" COTTER PIN
26	1	2987–301	DUST CAP RETAINER
27	1		COULTER BLADE–REFERENCE ONLY
28	1	2533–110	1/4"–28 LUBE FITTING–SELF TAP
29	1		SHANK 1–1/2" ROUND–REFERENCE ONLY

05/12/2016 S431

NOZZLE AND COULTER ASSEMBLY

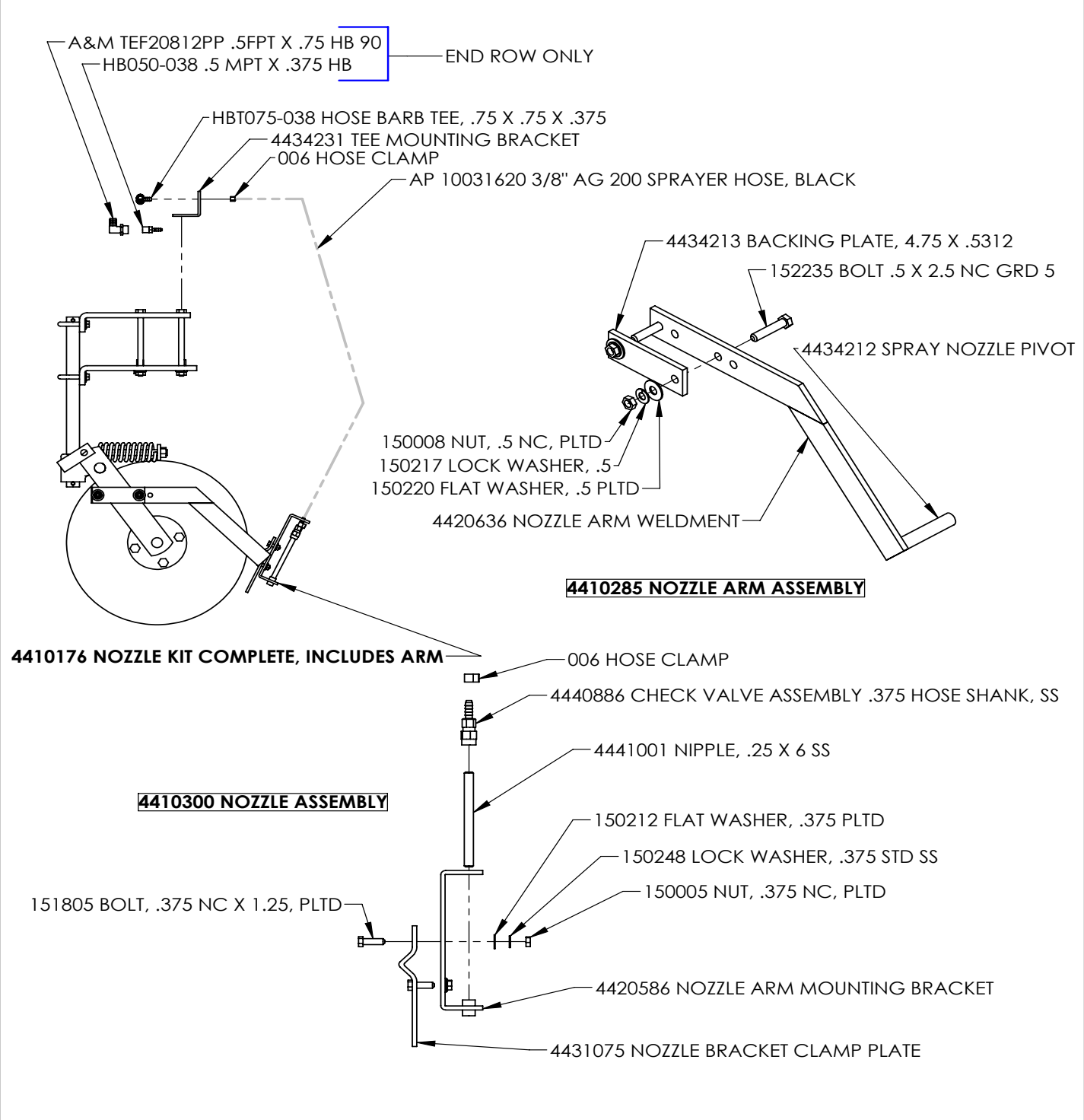

DRAWN BY	RICH SMOTHERS	7/22/2014	Dalton AG PRODUCTS www.DaltonAg.com
CHECKED BY			
PRINT DATE	6/21/2016		
CONFIG.	Default		
COMMENTS:			DWG: NOZZLE & COULTER ASSEMBLY
			SIZE A / SHEET TITLE: NOZZLE & COULTER ASSEMBLY / REV A
			SCALE: 1:16 / SHEET 1 OF 1

PROPRIETARY AND CONFIDENTIAL
THE INFORMATION CONTAINED IN THIS DRAWING IS THE SOLE PROPERTY OF CMC-DALTON AG. ANY REPRODUCTION IN PART OR AS A WHOLE WITHOUT THE WRITTEN PERMISSION OF CMC-DALTON AG IS PROHIBITED.

GROVE COULTER ASSEMBLY

B.O.M FOR COULTER ASSEMBLY

ITEM NO.	PART #	DESCRIPTION	QTY.
1	GC3000	Cast Coulter Knuckle	1
2	GC3005	Nylon Shaft Bushing	2
3	GC3010	Nylon Knuckle Bushing	1
4	GC3105	Lock Collar	1
5	GC4075	5/8-11x1 Sq Hd Set Pt	1
6	GC2005	Coulter Arm	1
7	GC3035	G120 Coulter Hub	1
8	GC5005	Dust Cap Keeper	1
9	GC3070	Spring Rod	1
10	GC3060	Nylon Spring Bushing	1
11	GC3055	Spring Bolt	1
12	GC3065	Spring Nut	2
13	GC3075	Spring	1
14	GC3080	Spring Alignment Casting	1
15	GC3085	Spring Lock Nut	1
16	GC3090	Washer	1
17	G905942	Cotter Pin	1
18	GC3095	Attachment Arm	1
19	GC3102	Knife Bracket	1
20	GC5010	Knife	1
21	GC3205	Injector Mount	1

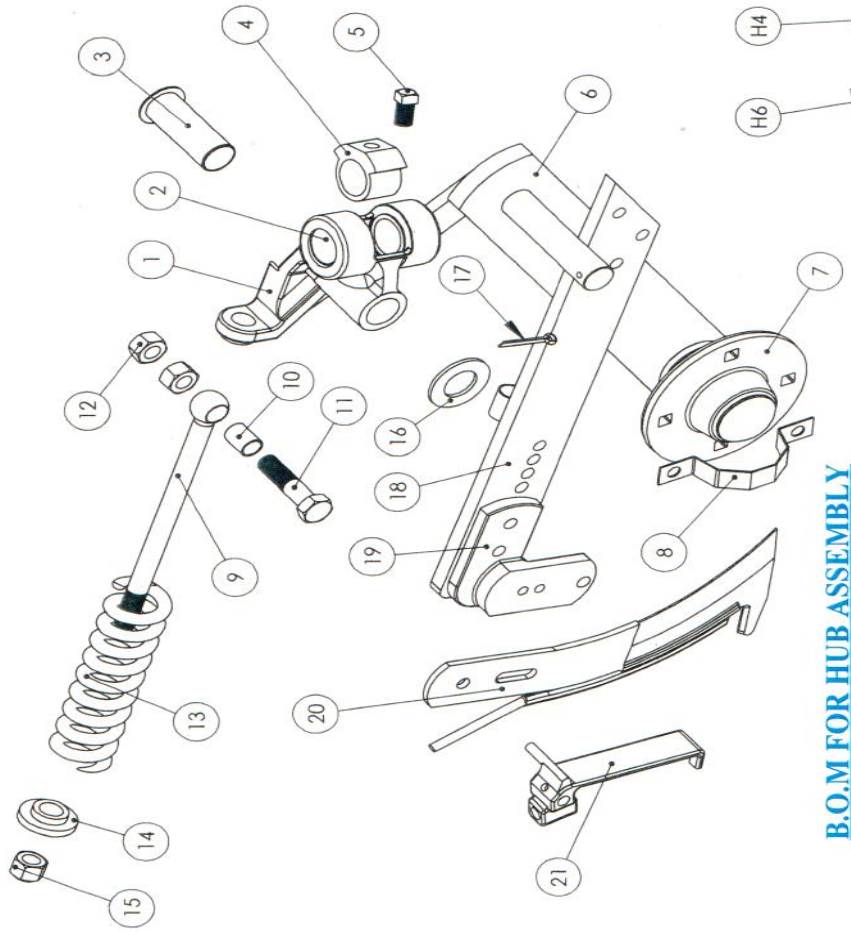

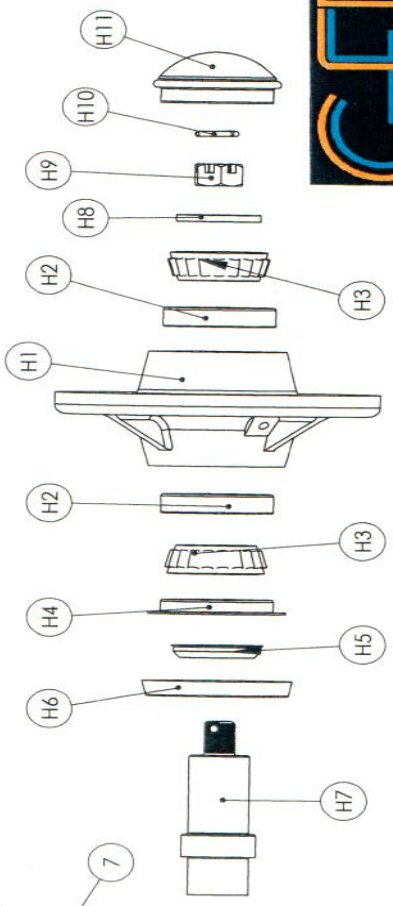

B.O.M FOR HUB ASSEMBLY

ITEM NO.	PART #	DESCRIPTION	QTY.
H1	GC3035	G120 Coulter Hub	1
H2	G910257	LM67010 Cup	2
H3	G910259	LM67048 Bearing	2
H4	GC3040	Seal Counterface	1
H5	GC3045	Coulter Seal	1
H6	GC3050	Seal Protector	1
H7	GC3020	Coulter Spindle	1
H8	G913611	Washer	1
H9	G912954	Slotted Hex Nut	1
H10	G905936	Cotter Pin	1
H11	G909970	Dust Cap	1

GROVE KNIFE AND INJECTION

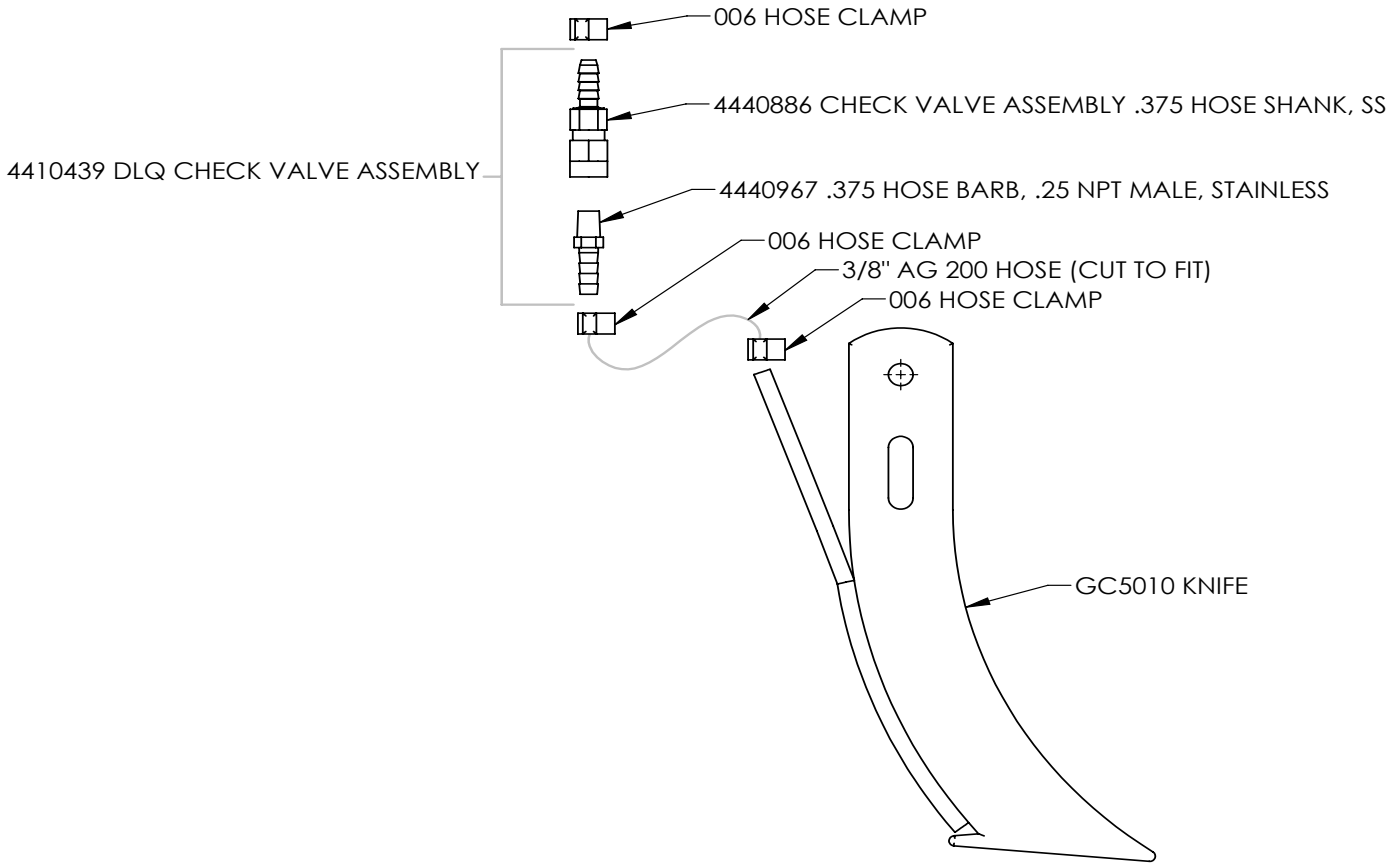

GROVE KNIFE ASSEMBLY

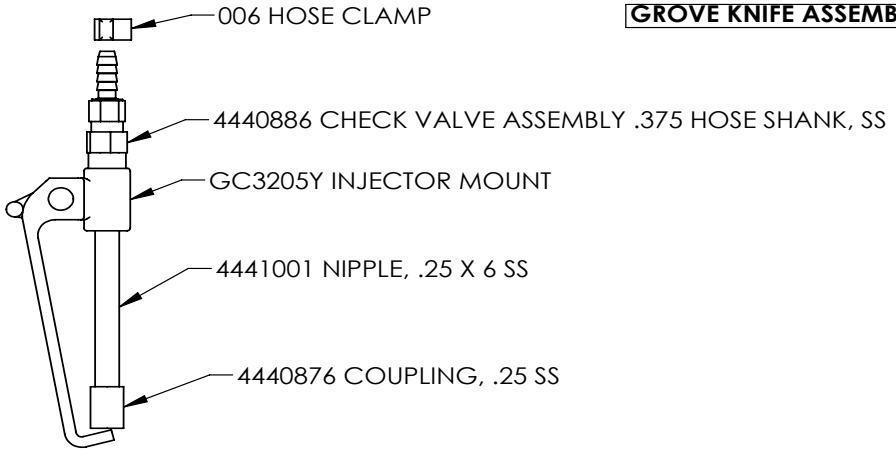

4410438 GROVE NOZZLE ASSEMBLY

DRAWN BY	RICH SMOTHERS	6/3/2016	
CHECKED BY			
PRINT DATE	8/6/2018		
CONFIG.	Default		
COMMENTS:			

Dalton USA AG PRODUCTS
www.DaltonAg.com

DWG: GROVE KNIFE AND INJECTION

SIZE A | SHEET TITLE: Sheet1 | REV A

SCALE: 1:4 | SHEET 1 OF 1

PROPRIETARY AND CONFIDENTIAL
THE INFORMATION CONTAINED IN THIS DRAWING IS THE SOLE PROPERTY OF DALTON AG. ANY REPRODUCTION IN PART OR AS A WHOLE WITHOUT THE WRITTEN PERMISSION OF DALTON AG IS PROHIBITED.

DECAL LAYOUT

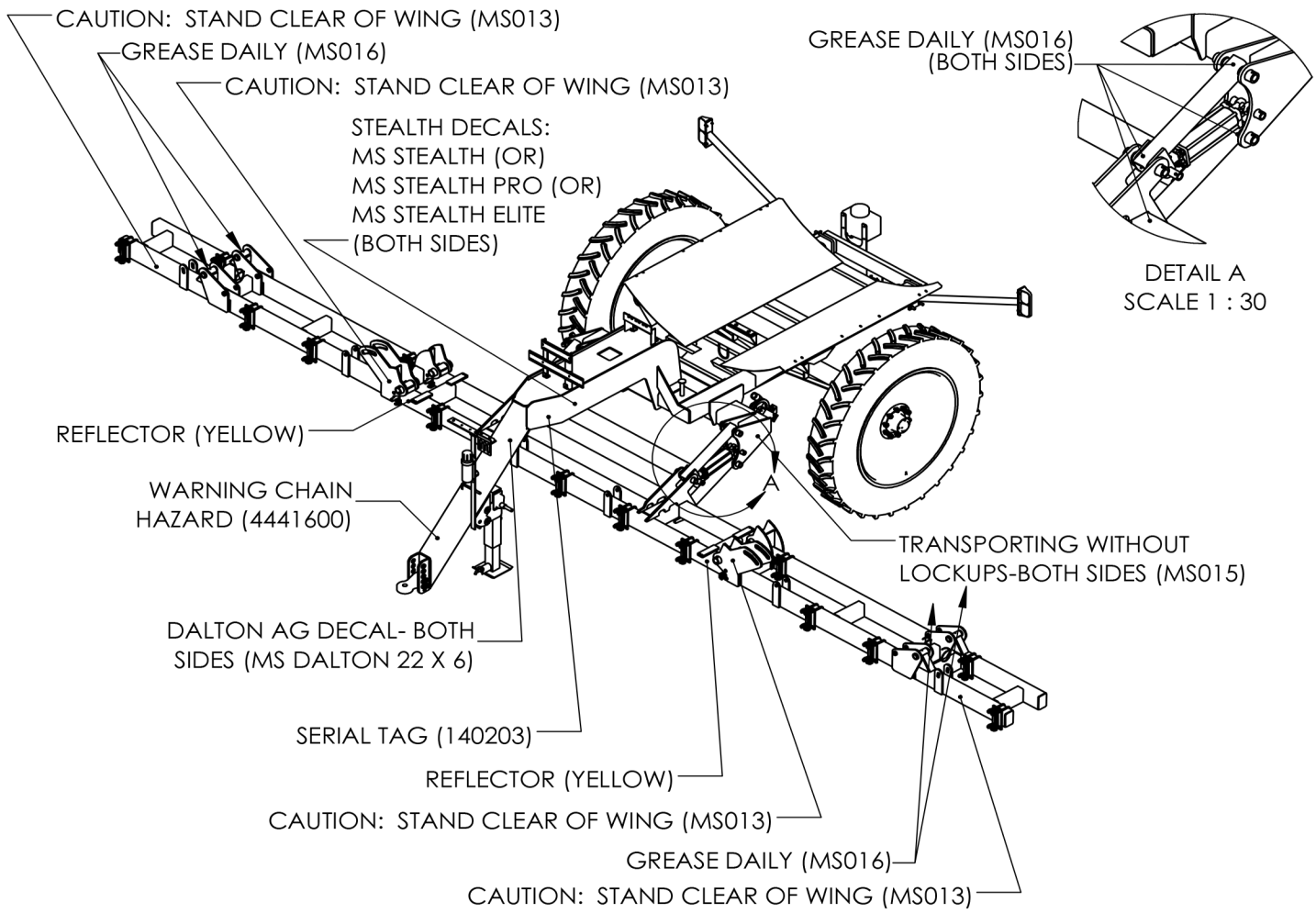

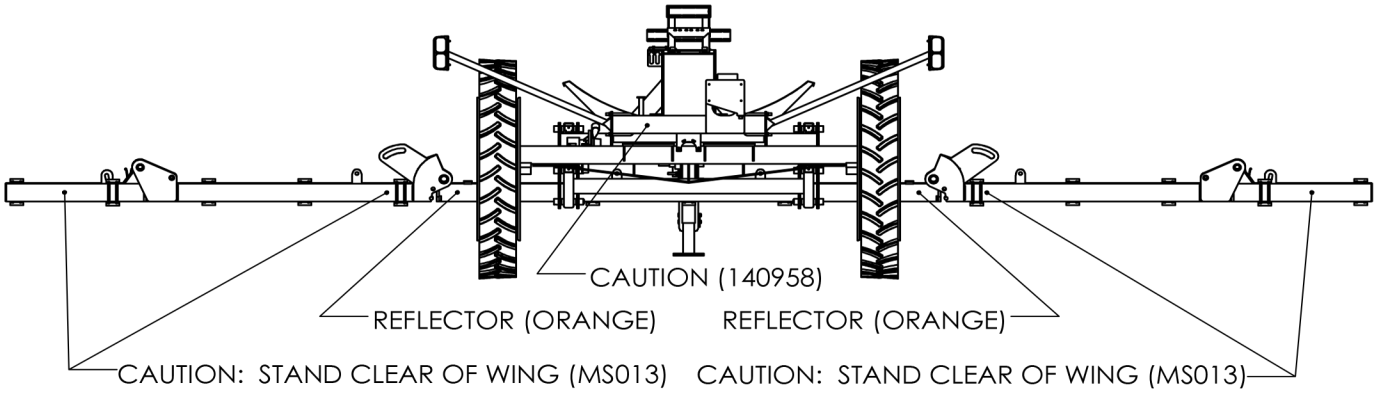

DRAWN BY	RICH SMOTHERS	9/24/2015	
CHECKED BY			
PRINT DATE	5/14/2025		
CONFIG.	Default		
COMMENTS:			

Dalton USA AG PRODUCTS
www.DaltonAg.com

DWG: DLQ - DECAL LAYOUT

SIZE	SHEET TITLE:	REV
A	Sheet1	A

SCALE: 1:60 | SHEET 1 OF 1

PROPRIETARY AND CONFIDENTIAL
THE INFORMATION CONTAINED IN THIS DRAWING IS THE SOLE PROPERTY OF DALTON AG. ANY REPRODUCTION IN PART OR AS A WHOLE WITHOUT THE WRITTEN PERMISSION OF DALTON AG IS PROHIBITED.

PARTS ORDERING PROCEDURE

Your Dalton Ag dealer is interested in your new fertilizer application equipment and has the desire to help you get the most value from it. Through the help of this manual, you will find you can do some of the regular maintenance yourself. For parts and service, contact the Dalton Ag Dealership from which you purchased your fertilizer application equipment or your local Dalton Ag dealer.

When replacement parts are required, consult the applicable illustration and parts list to obtain the correct part name and number. When requesting a replacement part, always include the following information:

1. Complete Part Number
2. Description
3. Quantity Required
4. Machine and Model Number
5. Machine Serial Number - located on the topside of the frame near hitch
6. Provide complete name and address for where and how parts are to be shipped.

NOTE: Right and left hand parts and sides of the units are determined by standing at the rear and facing in the direction of forward travel.

EQUIPMENT MODEL:_____

EQUIPMENT SERIAL NO.:_____

DATE OF PURCHASE:_____

NAME OF DEALER:_____

DEALER'S PHONE NUMBER:_____

Thank you for your business!

DaltonAg.com 602 E. Van Buren Lenox, Iowa 50851 **800.342.7498**

NOTES

Dalton

AG PRODUCTS

www.daltonag.com

602 E. VAN BUREN | LENOX, IOWA 50851 | 800-342-7498